P16890P31/30

SIL-Compliant Transducer for the Duplication, Conversion, and Isolation of Rotary Encoder Signals



The P16890 speed signal doubler is an innovative solution patented for safety-critical applications.

The pulse transducer carries out non-interacting signal decoupling for two-channel speed sensors and transmits the duplicated signals to downstream devices. In addition, high isolation and double-shielded optical signal transmission ensure extreme immunity to interference and undistorted signal doubling. The P16890 flexibly adapts rotary encoder signals to the conditions of downstream control units.

5 year warranty



Functionally Safe

- Non-interacting signal decoupling in accordance with SIL 4
- Optimized for use on rolling stock

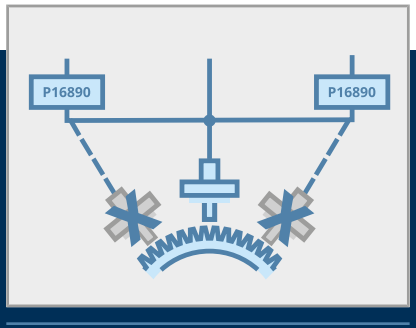

Reduces Costs for New Units

- Reduced number of rotary encoders
- Signal conditioning by converting voltage signals into current signals and vice versa, as well as by frequency division
- Reduced assembly and maintenance costs

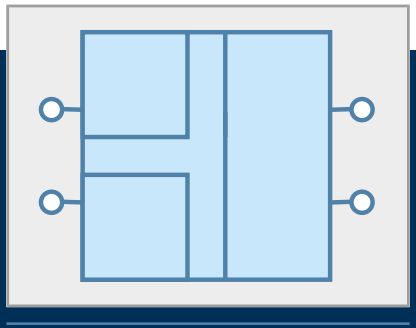

High Isolation

- Establishes galvanic isolation between the rotary encoder and control unit
- Protects downstream devices
- Evaluates the direction of travel (DOT)

Product Code

P16800 Product Family	P	1	6	_	_	_	P	3	_	/	_	_	_	_	_	_	_
Input pulses/output pulses				**8**													
1 input → 1 output					**1**												
2 inputs → 2 outputs					**2**												
2 inputs → 2 outputs, configurable as DOT (direction of travel), frequency division 1:1 or 2:1 or 4:1 with retention of 90° phase shift[1]					**9**	**0/N**					**3**						
With non-interacting input (SIL 4); Transmission of the signal to the output without SIL						**0**											
With non-interacting input (SIL 4) and with functionally safe transmission of the signal to the output (SIL 2)[2]						**2**											
Input without non-interaction; Transmission of the signal to the output without SIL						**N**											
Modular enclosure [3]								**3**									
Two-tier terminals in push-in version, pluggable									**1**								
Frequency division 1:1 or 2:1[4]											**2**						
Frequency division 1:1 or 4:1[4]											**4**						
Frequency division 1:1 or 8:1[4]											**8**						
Power supply/auxiliary power 10…33.6 V												**0**					
Special types													**-**	**S**	**x**	**x**	**x**

Specifications (Excerpt)

Excerpt from the user manual. Detailed information → *knick-international.com*

1 Input

Input signal	Voltage U or current I
Waveform	Square
Input frequency f_{in}	0…25 kHz

1.1 Voltage Reference

Voltage reference U_S	10…33.6 V
Error detection open cable U_S	< 8…10 V; typically 9.45 V

1.2 Voltage Input

Input voltage	0…U_S
Input switching level	Low: min. 27 % of U_S
	High: max. 77 % of U_S

1) Without middle voltage generation

2) No functionally safe transmission of signals to the output (SIL 2) when middle voltage detection is activated

3) For 35 mm DIN rail or wall mounting with the ZU1472 wall-mount adapter (optional)

4) The phase shift is lost for P1682*P**.

1.3 Current Input

Input current	6…20 mA
Input switching level at Low = 6/7 mA	Low: min. 9.025 mA
Input switching level at High = 14/20 mA	High: max. 12.075 mA
Error detection open cable	< 1.8…2.6 mA; typically 2.2 mA

2 Output

Output signal	Voltage U or current I
Waveform	Square
Signal conversion options	Current → current
	Voltage → voltage
	Current → voltage
	Voltage → current

2.1 Voltage Output

Voltage level	Low: < 1 V (at max. 20 mA)
	High: U_B…U_B – 2 V (at max. 20 mA)
	High (U_B open): > 5.5 V (at max. 20 mA)

2.2 Current Output

Current level High level dependent on configuration	Low: 4…8 mA; typically 6 mA
	High = 14 mA: 12…16 mA; typically 14 mA
	High = 20 mA: 18…22 mA; typically 20 mA

2.3 Switch Output

Technical version	Solid state relay
	Normally closed contact (N/C), opens if an error occurs
Fault response time	< 1 s

3 Transfer Characteristics

Functional behavior	The output level follows the input level.
	Optional: Frequency division or output of the direction of travel (DOT)
Output of the direction of travel (direction of travel, DOT)	Channel 1: static binary signal Channel 2: frequency division 1:1, 2:1, or 4:1, switchable
Overlapping time t_{OL}	> 1 µs
Reaction of outputs to detected error:	
Current output	0…100 µA
Voltage output	Low

4 Auxiliary Power

Requirements for the voltage source	Specific source in accordance with EN 50155 Section 5.1.1. For direct connection to a battery, burst immunity is restricted to evaluation criterion B. The influence on galvanic isolation must be considered.	
Electrical safety	All connected current and voltage circuits must meet the SELV, PELV, or EN 50153 Section I requirements.	
Supply of the output	V_S: Supply of the P16890[5]	
	U_B: Supply of output driver[6]	
Power supply	V_S: 10…33.6 V	
	U_B: 10…33.6 V	

5 Isolation

Galvanic isolation	Input circuits against output circuits	
	Input circuit channel In 1 against input circuit channel In 2	
Type test voltage	Input against output:	8.8 kV AC/5 s
		5 kV AC/1 min
	Channel In 1 against channel In 2:	3 kV AC/1 min
	Output against outer shield of the output (screen):	710 V AC/5 s
		600 V AC/60 s
	Input against outer shield of the input (screen):	2,200 V AC/5 s
		700 V AC/60 s
	Input against DIN rail:	3,550 V AC/5 s

Application Example

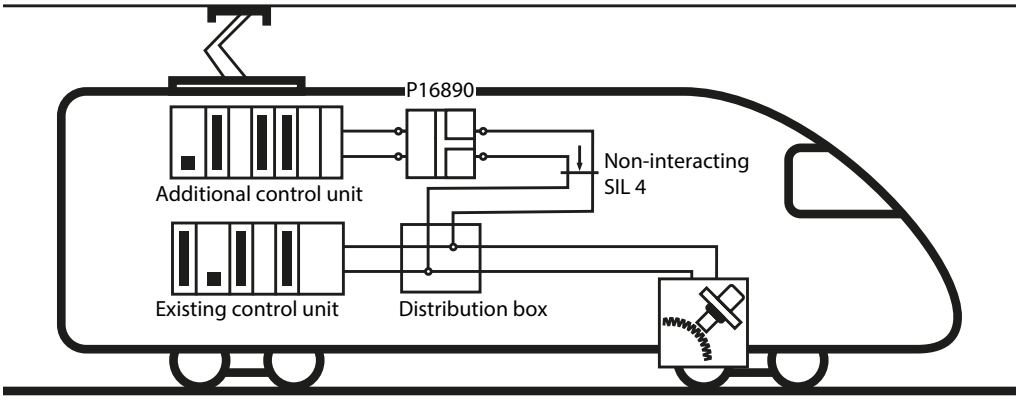

5) The entire device, including the input stage, is supplied via V_S.

6) The output stage can be supplied separately via the U_B connection. Next, the output voltage levels are set via U_B.

106636 TB-300.450-KNEN03 2026-10-15

Knick GmbH
Beuckestraße 22
14163 Berlin, Germany

Phone: +49 30 80191-0
info@knick.de • www.knick-international.com

Subject to change.