Knick

User Manual
incl. Safety Manual

P16890
Universal speed signal doubler

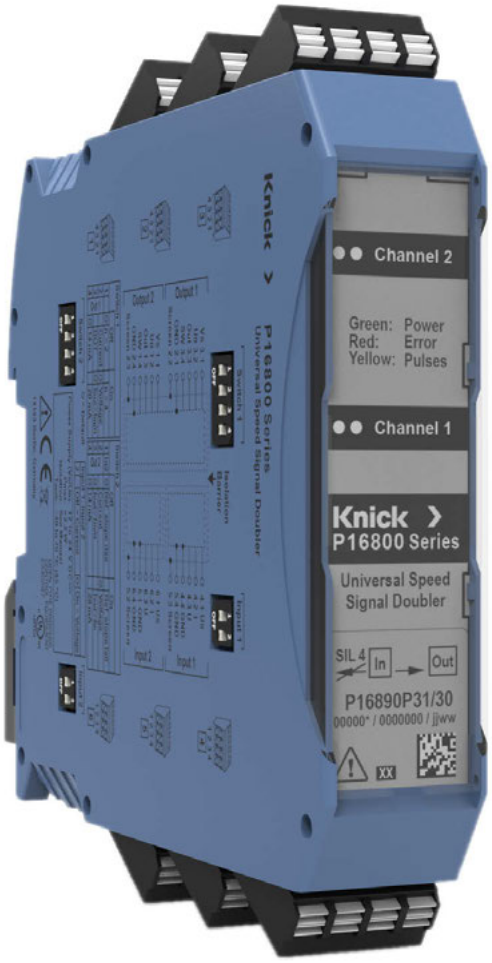

Read before installation.
Keep for future use.

www.knick-international.com

Supplemental Directives

READ AND SAVE THIS DOCUMENT FOR FUTURE REFERENCE. BEFORE ATTEMPTING TO ASSEMBLE, INSTALL, OPERATE OR MAINTAIN THE PRODUCT, PLEASE ENSURE A COMPLETE UNDERSTANDING OF THE INSTRUCTIONS AND RISKS DESCRIBED HEREIN. ALWAYS OBSERVE ALL SAFETY INFORMATION. FAILURE TO COMPLY WITH INSTRUCTIONS IN THIS DOCUMENT COULD RESULT IN SERIOUS INJURY AND/OR PROPERTY DAMAGE. THIS DOCUMENT IS SUBJECT TO CHANGE WITHOUT NOTICE.

These supplemental directives explain how safety information is laid out in this document and what content it covers.

Safety Chapter

This document's safety chapter is designed to give the reader a basic understanding of safety. It illustrates general hazards and gives strategies on how to avoid them.

Warnings

This document uses the following warnings to indicate hazardous situations:

Icon	Category	Meaning	Comment
⚠	**WARNING!**	Designates a situation that can lead to death or serious (irreversible) injury.	The warnings contain information on how to avoid the hazard.
⚠	**CAUTION!**	Designates a situation that can lead to slight or moderate (reversible) injury.	
Without	**NOTICE!**	Designates a situation that can lead to property or environmental damage.	

Symbols Used in this Document

Symbol	Meaning
▶	Sequence of figures attached to an instruction for action
①	Item number in a figure
(1)	Item number in text

Patents

For patents covering Knick products/technologies, refer to the Knick Patent Notice at → *www.knick-international.com*.

Table of Contents

1 Safety 6
1.1 Intended Use 6
1.2 Personnel Requirements 7
1.3 Isolation 7
1.4 Installation and Operation 7
1.5 EMC 7
1.6 Residual Risks 8

2 Product 9
2.1 Package Contents 9
2.2 Product Identification 9
2.2.1 Example Design 9
2.2.2 Product Code 10
2.2.3 Nameplate 11
2.3 Symbols and Markings 13
2.4 Design 14
2.5 Functional Description 15
2.5.1 Time Response at the Input 17
2.6 Input/Output 18
2.7 Voltage Supply 21
2.8 Shielding Concept 25
2.8.1 Decoupling the Signals of a Speed Sensor with Current Output 26
2.8.2 Decoupling the Signals of a Speed Sensor with Voltage Output 26
2.8.3 General Information on P16890 Shielding 27
2.8.4 Fundamentals of Shielded Cables and Signal Routing 28
2.8.5 Signal Cables at the P16890 Output 30
2.8.6 P16890 Power Supply 30

3 Configuration 31
3.1 Terminals 31
3.2 DIP Switches 31
3.3 Signal Diagrams 33

4 Installation and Commissioning 34
4.1 Mounting 34
4.2 Terminal Assignment 36
4.3 Electrical Installation 38
4.4 Insertable Jumpers 40
4.5 Commissioning 40

5 Operation 41
5.1 LED Signaling 41
5.2 Signal Behavior for Input Errors 42
5.3 Maintenance and Repair 43

6 Troubleshooting 44

7 Decommissioning 45

7.1 Dismounting 45

7.2 Return Delivery 46

7.3 Disposal 46

8 Accessories 47

9 Dimension Drawings 48

10 Specifications 49

10.1 Limit Values 49

10.2 Recommended Operating Conditions 49

10.3 Input 50

10.3.1 Voltage Reference 50

10.3.2 Voltage Input 50

10.3.3 Current Input 50

10.4 Output 51

10.4.1 Voltage Output 51

10.4.2 Current Output 51

10.4.3 Switch Output 51

10.5 Transfer Characteristics 52

10.6 Auxiliary Power 52

10.7 Isolation 53

10.8 Ambient Conditions 54

10.9 Device 55

10.10 Further Data 55

11 Appendix 56

11.1 Standards and Directives 56

11.2 Compliance with Standards 57

11.3 Details on Isolation, Isolating Distances, Contamination, and Overvoltage 59

12 Safety Manual 60

12.1 General Description 60

12.2 Safety and Safety Integrity Level Requirements 60

12.2.1 Functional Safety Requirements 60

12.2.2 Safety Integrity Requirements 60

12.3 SRACs for System Project Planning and Structure, as well as Operation, Maintenance and Safety Monitoring 61

12.3.1 SRAC A: Sensor Prerequisites 61

12.3.2 SRAC B: Detecting a Current Drop to 0 mA (Primary Control Unit) 61

12.3.3 SRAC C: Implementing Sensor-Dependent SRACs 61

12.3.4 SRAC D: Validity of the Input Signal of the Primary Control Unit 61

12.3.5 SRAC E: Wiring (input side) 62

12.3.6 SRAC F: Does not apply to P16810/P16820/P16890 62

12.3.7 SRAC G: Does not apply to P16810/P16820/P16890 62

12.3.8 SRAC H: Does not apply to P16810/P16820/P16890 62

12.3.9 SRAC I: Does not apply to P16810/P16820/P16890 62

12.3.10 SRAC J: Protection Against Environmental Influences and Unauthorized Access 62

12.3.11 SRAC K: Implementation of the requirements applicable to the use of a P16810/P16820/P16890 as described in the user manuals 62

12.3.12 SRAC L: DIP switch configuration compliant with the wiring (here: only input side) . 63

12.3.13 SRAC M: Safety Testing 63

12.3.14 SRAC N: Secondary control units – only non-safety-related applications 63

13 Abbreviations 64

1 Safety

This document contains important instructions for the use of the product. Always follow all instructions and operate the product with caution. If you have any questions, please contact Knick GmbH (hereinafter sometimes referred to as "Knick") using the information provided on the back page of this document.

1.1 Intended Use

The P16890 is part of the P16800 product family.

The product is suitable for use with both rolling stock and industrial applications.

P16890 is suitable for the following fields of application:

- Galvanically isolated and non-interacting evaluation of speed sensor signals or binary status signals, with functions for frequency division, direction of travel detection, and conversion between voltage and current signals
- Applications with encoders and speed sensors[1)] in general industrial settings
- Speed measurement, rotational speed measurement, and indication of direction of travel on rolling stock (odometry)
- Systems on rolling stock that require route, time or speed information, for example:
  - Train protection system
  - Slide protection/brake control
  - Traction control
  - Anti-skid
  - Door control system
  - Collision alert system
  - JRU (juridical recorder unit)
  - Tachometer
  - PIS (passenger information system)
  - Driver assistance system
  - Computer-supported operational control

All names such as device, product or P16890 describe the universal speed signal doubler in the different variants.

All relevant technical parameters and specifications are listed in the specifications and are binding. Deviations can lead to injuries, malfunctions, or damage. → *Specifications, p. 49*

The specific version of the product (including deviating characteristics for special versions) is stated on the nameplates attached to the product. The information on the nameplates is binding.

USE CAUTION AT ALL TIMES WHEN INSTALLING, USING, OR OTHERWISE INTERACTING WITH THE PRODUCT. ANY USE OF THE PRODUCT EXCEPT AS SET FORTH HEREIN IS PROHIBITED, AND MAY RESULT IN SERIOUS INJURY OR DEATH, AS WELL AS DAMAGE TO PROPERTY. THE OPERATING COMPANY SHALL BE SOLELY RESPONSIBLE FOR ANY DAMAGES RESULTING FROM OR ARISING OUT OF AN UNINTENDED USE OF THE PRODUCT.

See also
→ *Product Code, p. 10*

1) The term "speed sensor" is used in the following as a generic term for speed sensors, pulse generators, and position encoders.

1.2 Personnel Requirements

The operating company shall ensure that any personnel using or otherwise interacting with the product is adequately trained and has been properly instructed.

The operating company shall comply and cause its personnel to comply with all applicable laws, regulations, codes, ordinances, and relevant industry qualification standards related to the product. Failure to comply with the foregoing shall constitute a violation of operating company's obligations concerning the product, including but not limited to an unintended use as described in this document.

1.3 Isolation

Measure the distances to slaves and conductive parts in the vicinity of the device in accordance with the applied standard. The operating company must implement, evaluate and ensure insulation coordination with the clearance and creepage distances and the corresponding standards (e.g., EN 50124-1).

1.4 Installation and Operation

All national and local regulations relating to the installation and operation of the product in force at the destination must be followed.

All connected current or voltage circuits must meet the SELV, PELV, or Area I requirements according to EN 50153.

- The product must be installed by qualified electrical engineering personnel.
- The product may not be opened, modified, or independently repaired. Replace it with an equivalent product. Repairs may only be carried out by Knick.
- The operating company must ensure compliance with the specified interface parameters and ambient conditions.
- The product must be installed in a lockable control cabinet.

See also
→ *Installation and Commissioning, p. 34*
→ *Operation, p. 41*

1.5 EMC

To ensure compliance with EN 50155, P16890 should not be fed directly from the battery voltage supply system without additional galvanic isolation.

The P16890 has limited internal protection against EMC interference that can occur on the supply lines as defined in EN 50151-3-2. External protective devices must be implemented if EMC interference is present on the supply lines. This type of EMC interference could have a negative impact on the output signals.

To ensure electromagnetic compatibility, shielded cables and cable glands providing 360° shield contact must be used. All connections must have low impedance. The potential differences between the screen terminals and the frame or earth potential must be as small as possible.

Sensitive components must be protected against electrostatic discharge (ESD).

1.6 Residual Risks

Observe the different levels of functional safety.

The product has been developed and manufactured in accordance with generally accepted safety rules and regulations, as well as an internal risk assessment. Despite the foregoing, the product may among others bear the following risks:

Ambient Influences

The effects of moisture, corrosion, and ambient temperature as well as high voltages and fast transients can affect the safe operation of the product. Observe the following instructions:

- P16890 may only be operated in compliance with the specified operating conditions.
  → *Specifications, p. 49*

2 Product

2.1 Package Contents

- P16890 in the version ordered
- 3-pin insertable jumper: 2 units
- 2-pin insertable jumper: 6 units
- Test report 2.2 in accordance with EN 10204
- Installation guide with safety instructions

Note: Check P16890 for damage. Do not use damaged products.

2.2 Product Identification

2.2.1 Example Design

Universal Speed Signal Converter	P	1	6	8	9	0	P	3	1	/	3	0
Input pulses/output pulses				8								
2 inputs → 2 outputs, configurable as DOT (direction of travel), frequency division 1:1 or 2:1 or 4:1 with retention of the 90° phase shift					9	0					3	
Modular enclosure[1)]							P	3				
Two-tier terminals in push-in version, pluggable									1			
Power supply/auxiliary power 10 … 33.6 V												0

1) For 35 mm DIN rail or wall mounting with the ZU1472 wall-mount adapter (optional)

2.2.2 Product Code

P16800 Product Family	P	1	6	_	_	_	P	3	_	/	_	_	_	_	_	_	_
Input pulses/output pulses				8													
1 input → 1 output[1)]					1												
2 inputs → 2 outputs[1)]					2												
2 inputs → 2 outputs, configurable as DOT (direction of travel), frequency division 1:1 or 2:1 or 4:1 with retention of 90° phase shift[2)]					9	0/N					3						
With non-interacting input (SIL 4); Transmission of the signal to the output without SIL						0											
With non-interacting input (SIL 4) and with functionally safe transmission of the signal to the output (SIL 2)[3) 1)]						2											
Input without non-interaction; Transmission of the signal to the output without SIL						N											
Modular enclosure [4)]								3									
Two-tier terminals in push-in version, pluggable									1								
Frequency division 1:1 or 2:1[5) 1)]											2						
Frequency division 1:1 or 4:1[5) 1)]											4						
Frequency division 1:1 or 8:1[5) 1)]											8						
Power supply/auxiliary power 10 … 33.6 V												0					
Special types[6)]													-	S	x	x	x

1) Listed in other user manual.
2) Without middle voltage generation
3) No functionally safe transmission of signals to the output (SIL 2) when middle voltage detection is activated
4) For 35 mm DIN rail or wall mounting with the ZU1472 wall-mount adapter (optional)
5) The phase shift is lost for P1682*P**.
6) Deviations from the user manual in accordance with the information on the product

2.2.3 Nameplate

The P16890 is identified by nameplates on the side and front of its housing. The information on the nameplates varies depending on the version of the product.
→ *Product Code, p. 10*

Nameplate, device front

Example:

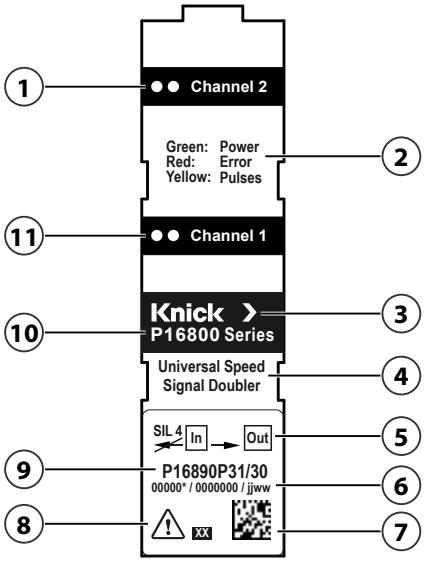

1	LED (2×) channel 2	7	DataMatrix code with item and serial numbers
2	Meaning of LED display	8	Special conditions and danger points
3	Manufacturer	9	Model designation
4	Product designation	10	Product family
5	SIL marking (if present)	11	LED (2×) channel 1
6	Item number/serial number/production date		

Nameplate, device side

Example:

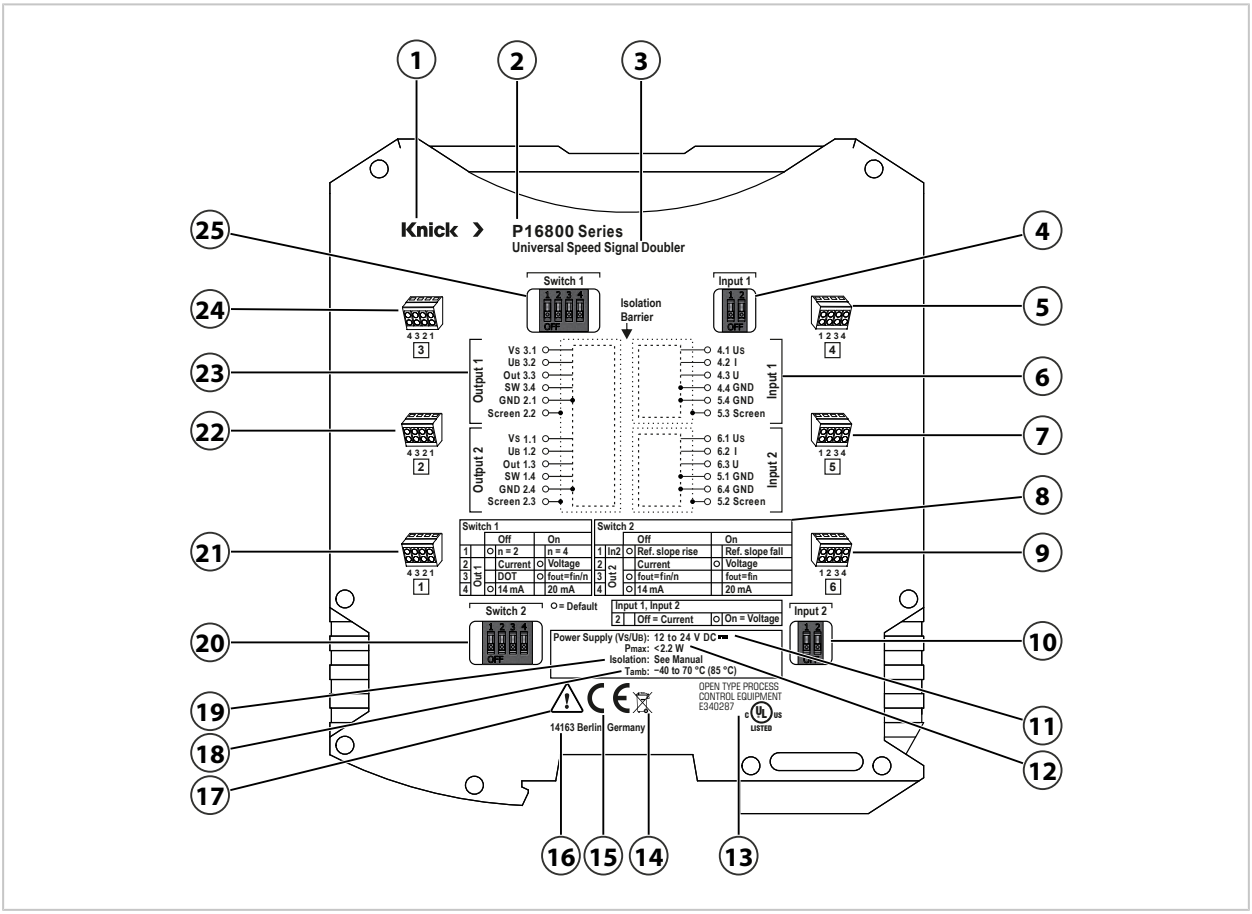

1	Manufacturer	14	WEEE mark
2	Product family	15	CE mark
3	Product designation	16	Manufacturer address with designation of origin
4	DIP switch input 1	17	Special conditions and danger points
5	Two-tier terminal 4	18	Permitted ambient temperature
6	Connection diagram input 1 and 2 from sensor	19	Isolation
7	Two-tier terminal 5	20	DIP switch 2
8	Configuration overview	21	Two-tier terminal 1
9	Two-tier terminal 6	22	Two-tier terminal 2
10	DIP switch input 2	23	Connection diagram output 1 and 2 to Control Unit
11	Power supply	24	Two-tier terminal 3
12	Power consumption total device (VS and UB)	25	DIP switch 1
13	UL test mark		

See also

→ *Symbols and Markings, p. 13*
→ *Abbreviations, p. 64*

2.3 Symbols and Markings

	Special conditions and danger points! Observe the safety instructions and instructions on safe use of the product as outlined in the product documentation.
	The affixed CE mark on the product indicates that the product complies with the applicable requirements stipulated in the harmonization legislation of the European Union.
	UL Listed: Combined UL mark for Canada and the United States
	The symbol on Knick products means that waste devices must be disposed of separately from unsorted municipal waste.
	DIP switch: Factory setting (default)
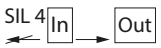	Non-interacting decoupling of input signals, fulfills SIL 4 specifications

2.4 Design

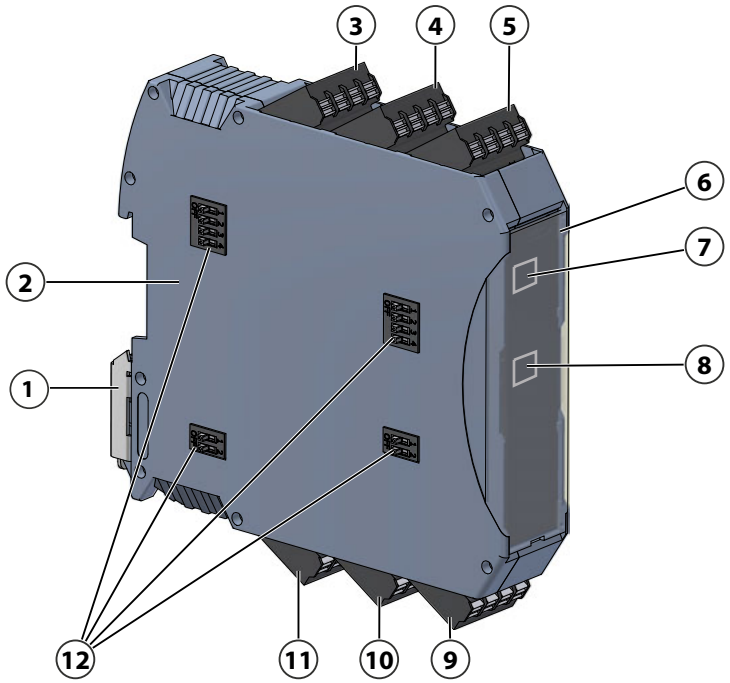

1	Metal foot catch	7	LED (2×) channel 2 (if present)
2	Side (with nameplate)	8	LED (2×) channel 1
3	Two-tier terminal 1	9	Two-tier terminal 4
4	Two-tier terminal 2	10	Two-tier terminal 5
5	Two-tier terminal 3	11	Two-tier terminal 6
6	Device front (with nameplate)	12	DIP switch

See also

→ *DIP Switches, p. 31*
→ *LED Signaling, p. 41*

2.5 Functional Description

The P16890 universal speed signal doubler decouples speed sensor signals or binary status signals using non-interacting decoupling. The primary signal circuit is retained and the speed sensor remains galvanically connected to the primary control unit (Control Unit 1). The inputs process the sensor signals in a non-interacting manner and thus fulfill SIL 4 specifications. The processed signals are transmitted to the outputs with potential isolation and transmitted to a secondary signal circuit with a secondary control unit (Control Unit 2).

Input and Output Description

The inputs of P16890 are designed such that speed sensors with current or voltage output can be connected. The outputs of P16890 can be configured as current or voltage outputs and behave like a speed sensor towards control units. The voltage inputs and outputs are designed for square-wave signals with an HTL level.

Direction of Travel (DOT Function)

P16890 can be configured to determine the direction of travel of the connected speed sensor by evaluating the phase reference between channel 1 and channel 2 (DOT, direction of travel). The direction of travel is output as a binary signal at output Out 1. The level output at Out 1 is determined by the reference edge set at the DIP switches (rising or falling). By selecting the reference edge, the output of the information on the direction of travel can be inverted. When the DOT function is activated, the input signal of channel 2 can be output at output Out 2 with a frequency division of 1:1, 2:1, or 4:1.
→ *Nameplate, p. 11*

In a configuration with an activated DOT function, the information on the direction of travel is contained in the DOT output signal.

The following figure shows the basic waveforms of a speed sensor and how the direction of travel is evaluated (DOT function).

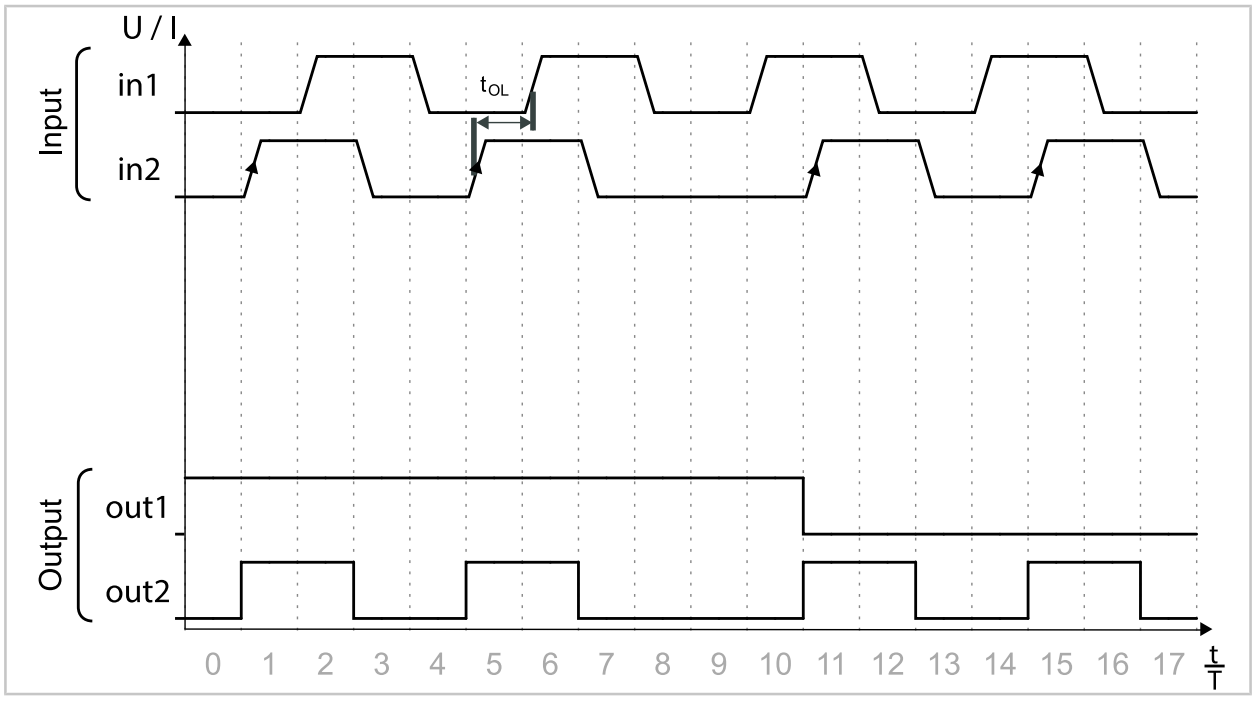

When observing the overlapping time t_{OL}, take into account that speed sensors with open-drain outputs exhibit different signal rise and fall times at their output for functional reasons.

Frequency Division

For a frequency division of 2:1 or 4:1, P16890 retains the 90° phase shift of both channels when it outputs the input signal. The output signal has a duty cycle of 50 %, regardless of the duty cycle of the input signal. A frequency division of more than 4:1 can be achieved by connecting multiple P16890 in series. In a configuration with identical frequency division of both channels, the information on the direction of travel is contained in the phase angle of the output signals.

For channel 2, these reference edges can be selected for evaluating the direction of travel:

- Rising edge (“reference slope rise”)
- Falling edge (“reference slope fall”)

This is set at the DIP switches. → *DIP Switches, p. 31*

Function Monitoring and Signal Quality

The SW switch output is used for function monitoring. It is a diagnostic switch that changes to the open state when an error is detected.

P16890 establishes galvanic isolation between the speed sensor and control unit. This decouples the control units from the speed sensors, reduces EMC interference, and improves signal quality.

To adapt the input switching level to the HTL level of the sensor signals, voltage reference input U_S is connected to the supply voltage of the speed sensor. Correct operation is not ensured unless U_S is properly connected to the sensor voltage.

See also

→ *Nameplate, p. 11*
→ *DIP Switches, p. 31*

2.5.1 Time Response at the Input

The inputs for current and voltage signals are designed as Schmitt trigger inputs, which influences the time response of P16890. The U_Q signal is output at the output of the input stage.

The following diagram shows an example of time response for voltage signals. The relationships shown apply analogously to current signals.

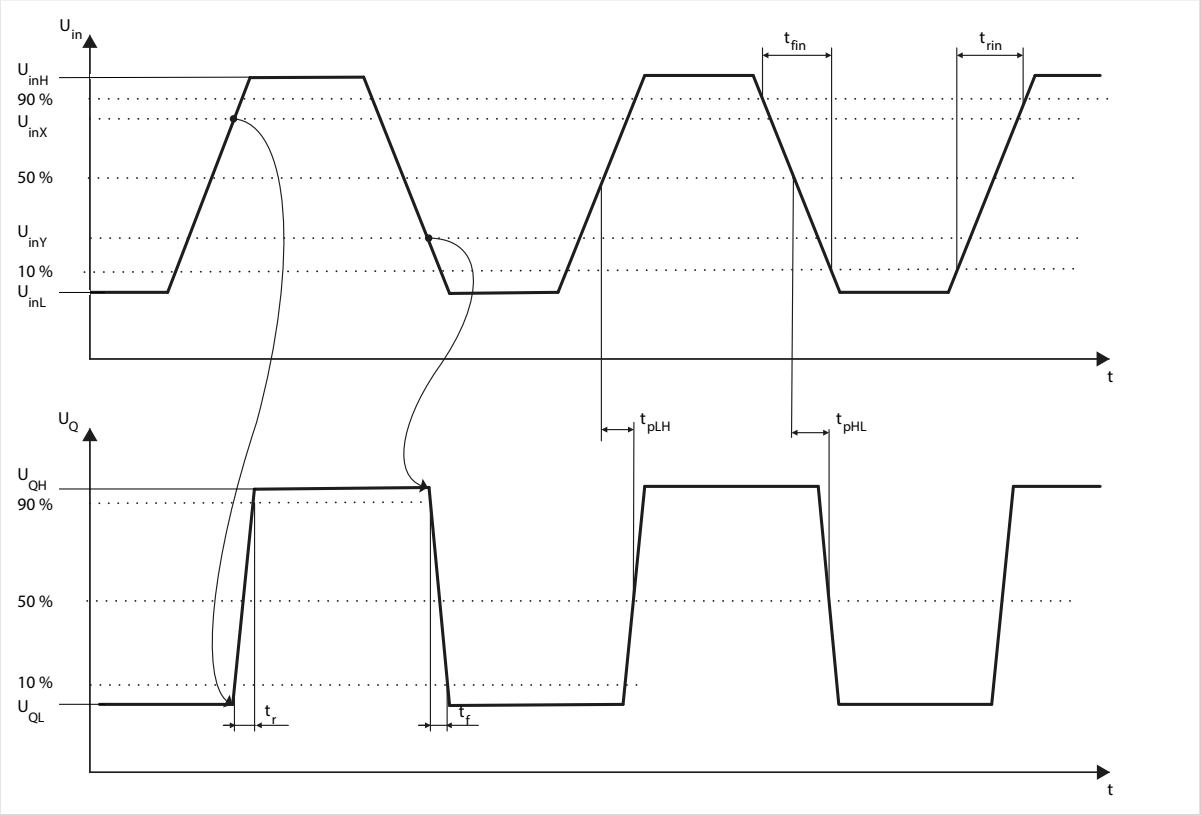

There is no change at the output until the input signal reaches the respective high or low switching level (U_{inX} or U_{inY}). Curved lines are used in the diagram to represent this signal processing. Subsequently, the output signal rises with the internal rise time t_r or falls with the internal fall time t_f.

The propagation time depends on the rise or fall times of the input signal. Asymmetries between the channels are possible and have an effect on the resulting output signal.

$$t_{p_{LH}} \approx \frac{U_{inX}-U_{inL}}{(0{,}9-0{,}1)(U_{inH}-U_{inL})}\, t_{rin} + \frac{0{,}5}{0{,}9-0{,}1}\, t_r$$

$$t_{p_{HL}} \approx \frac{U_{inH}-U_{inY}}{(0{,}9-0{,}1)(U_{inH}-U_{inL})}\, t_{fin} + \frac{0{,}5}{0{,}9-0{,}1}\, t_f$$

t_{pLH}	Propagation time for rising edges (low → high)
t_{pHL}	Propagation time for falling edges (high → low)
U_{inX}	High switching level
U_{inY}	Low switching level
U_{inL}	Input voltage (low)
U_{inH}	Input voltage (high)
U_Q	Internal voltage at the output of the input stage
t_{rin}	Rise time U_{in}
t_r	Rise time U_Q
t_{fin}	Fall time U_{in}
t_f	Fall time U_Q

2.6 Input/Output

Speed sensors with a voltage output and current output can be connected to inputs U or I of P16890.

Speed Sensor with Voltage Output

With its voltage reference input U_S, P16890 is connected to the power supply of the speed sensor **(4)**. Each of the two voltage outputs of a 2-channel speed sensor **(1)** is connected to one input each (U_1, U_2) **(2)** of P16890. The GND terminal is connected to the negative terminal of the power supply of the speed sensor **(4)**.

The input circuits consist of the input voltage divider for channel 1 **(3)** and the input voltage divider for channel 2 **(5)**. No separate supply voltage is required.

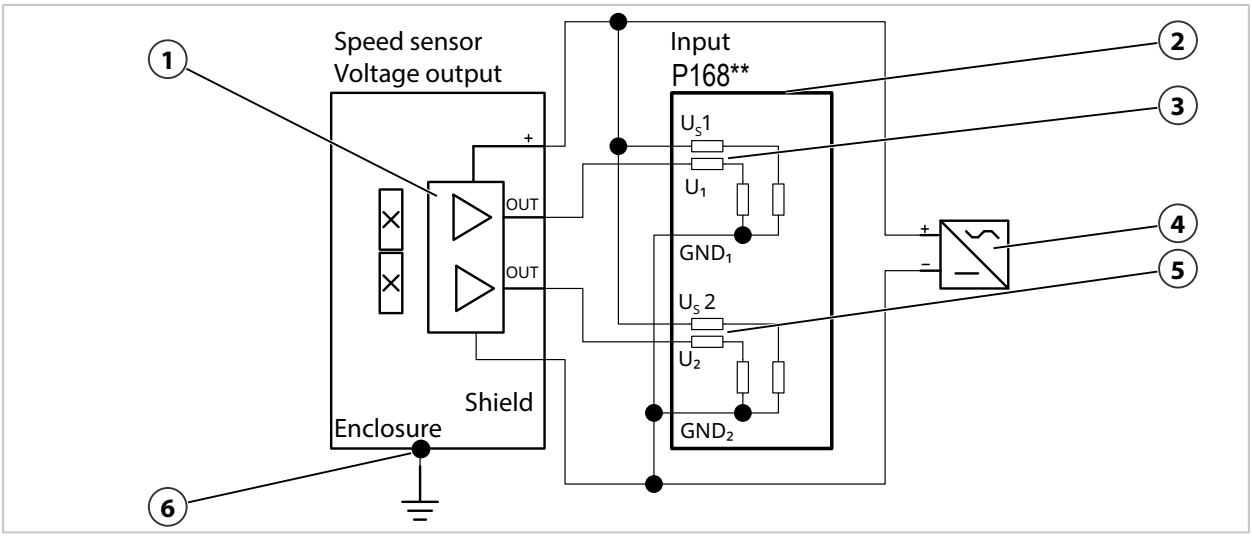

1	Voltage outputs of a 2-channel speed sensor	4	Power supply to speed sensor
2	Voltage inputs P168**	5	Input voltage divider channel 2 with U2 and GND2
3	Input voltage divider channel 1 with U1 and GND1	6	Equipotential bonding

Speed Sensor with Current Output

Each of the two current outputs of a 2-channel speed sensor **(1)** is connected to one input each (I_1, I_2) **(2)**of P16890. The GND terminal of P16890 is connected to the negative terminal of the power supply of the speed sensor **(4)**.

The signal currents flow through the internal load resistors **(3)**, **(5)** of P16890. These load resistors are protected against overload by diodes connected in parallel.

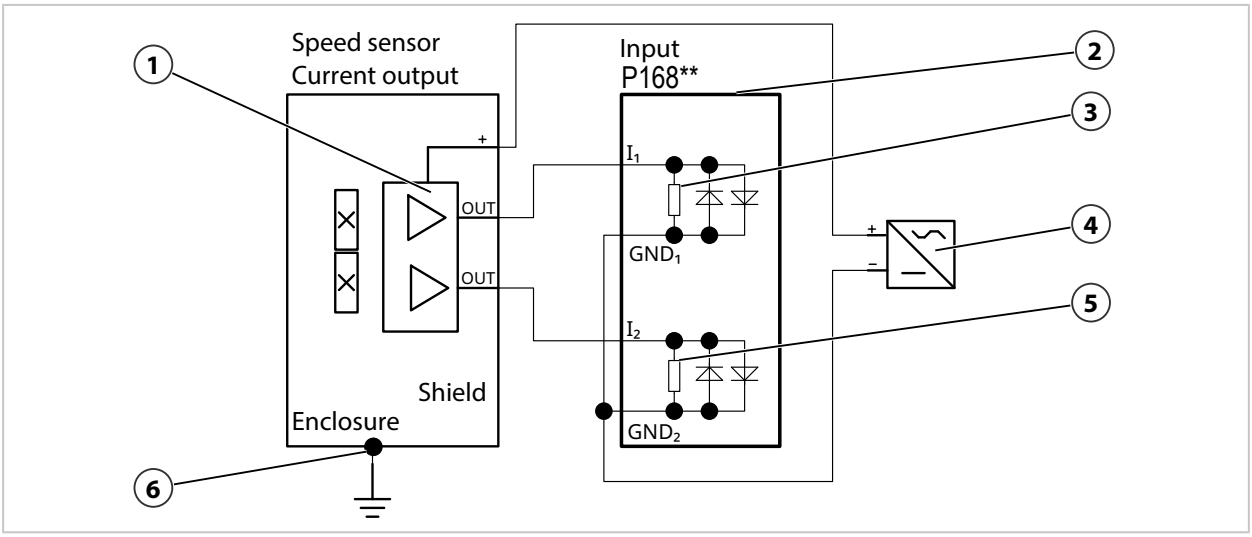

1	Current outputs of a 2-channel speed sensor	4	Power supply to speed sensor
2	Current inputs P168**	5	Internal load resistance channel 2
3	Internal load resistance channel 1	6	Equipotential bonding

Output Circuit of a P16890 Channel

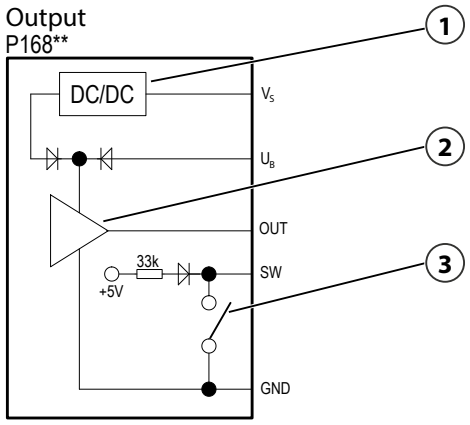

1 Internal voltage converter	3 Switch output for status signaling
2 Output driver for current and voltage	

P16890 is supplied with power through the V_S and GND terminals (supply not shown in the figure).

The output of P16890 has two supply connections: V_S and U_B.

If the U_B connection is used, the output driver **(2)** is supplied via the diode network by the voltage applied at U_B. If the U_B connection is open, the output driver **(2)** is supplied via V_S and an internal voltage converter **(1)**.

The OUT signal output can be configured via DIP switches as either a current or voltage output.

The SW switch output **(3)** is a diagnostic switch. An open switch output signals a detected error.

All connections of the output are protected against GND_{out} by bipolar (SW: unipolar) suppressor diodes. The reference potential for the current and voltage output is the ground of output GND_{out}.

See also
→ *DIP Switches, p. 31*

2.7 Voltage Supply

P16890 is supplied per channel via the output circuits. The output circuits and, with them, the associated galvanically isolated input circuits, are supplied via terminal V_S or U_B. The power supplies of channels 1 and 2 are not galvanically isolated. P16890 can be supplied via a downstream secondary control unit (Control Unit 2) or an additional power supply unit. The internal power supplies are galvanically connected to the outputs.

To ensure compliance with EN 50155, P16890 should not be fed directly from the battery voltage supply system without additional galvanic isolation.

The P16890 has limited internal protection against EMC interference that can occur on the supply lines as defined in EN 50151-3-2. External protective devices must be implemented if EMC interference is present on the supply lines. This type of EMC interference could have a negative impact on the output signals.

By selecting the following connection options, it is possible to adapt the supply current from the downstream control unit. The following figures show the options for supplying the current and voltage outputs. The connection options presented are differentiated by the way they use the U_B connection. When the terminal U_B is used, the amplitude and quality of the output signal depends on the voltage applied to U_B.

Power supply via the control unit at terminal V_S

If the terminal U_B is not connected, P16890 is supplied internally via V_S. For this operating mode, the reduced output level must be taken into account. → *Output, p. 51*

Note: The control unit must be able to reliably evaluate this low level.

Current Output

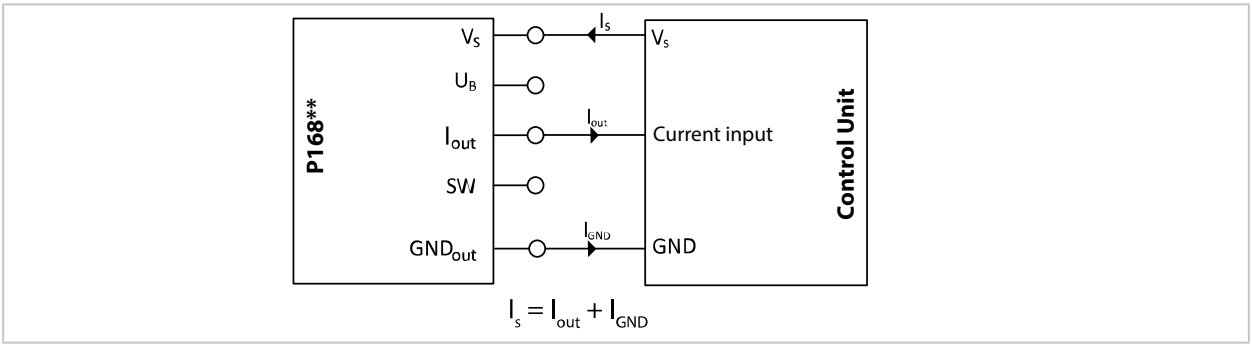

Voltage Output

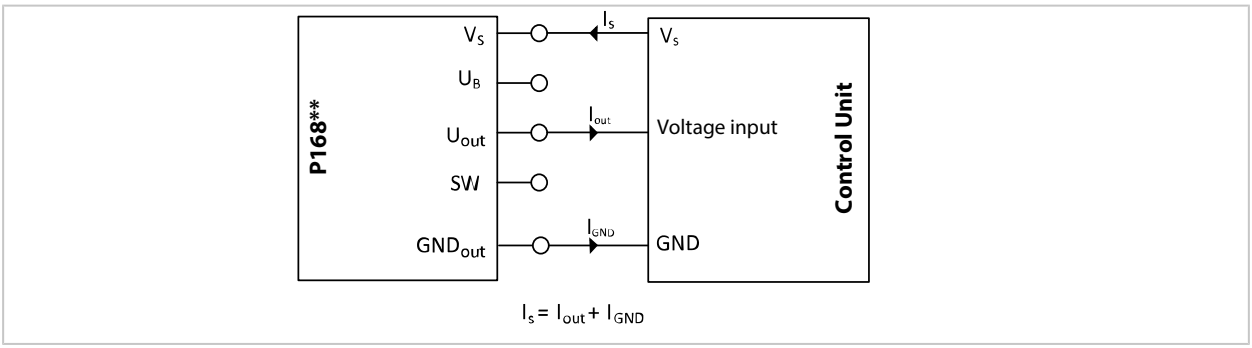

→ *Abbreviations, p. 64*

Power Supply via the Control Unit at Connections V_S and U_B

If high signal levels are required at the control unit inputs, connection U_B must be connected.

Current Output

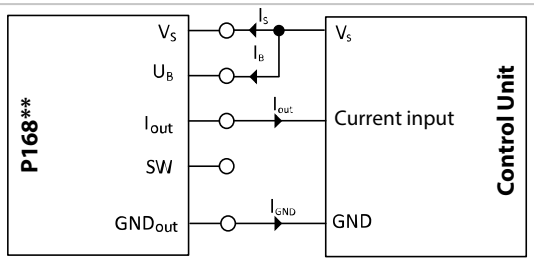

$I_B \approx I_{out}$

$I_S \approx I_{GND}$

Voltage Output

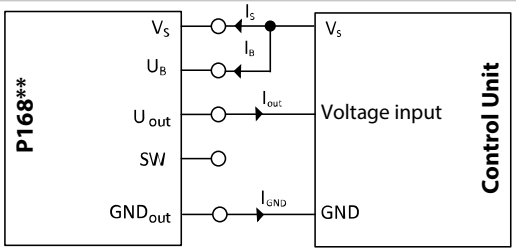

$I_B \approx I_{out}$ $(U_{out} \approx U_B)$

$I_S \approx I_{GND}$

→ *Abbreviations, p. 64*

Additional power supply via power supply unit at connection V_S

If the control unit cannot provide sufficient current for the operation of P16890 or the permissible current is exceeded, a separate power supply unit can be used to supply additional power at connection V_S.

In doing so, connection U_B is connected to the control unit.

The additional power supply unit supplies P16890 in parallel to the control unit and provides stable auxiliary power to V_S.

This configuration relieves the control unit and ensures that the outputs have a stable supply.

Current Output

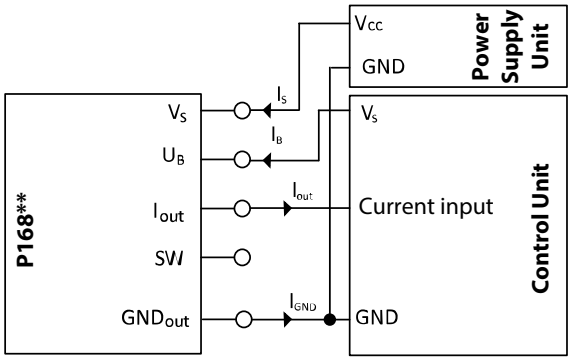

$I_B \approx I_{out}$

$I_S \approx I_{GND}$

Voltage Output

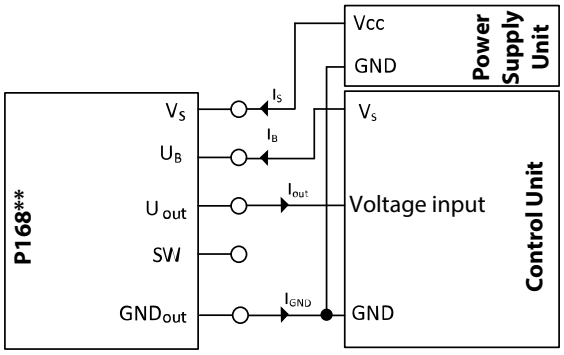

$I_B \approx I_{out}$ ($U_{out} \approx U_B$)

$I_S \approx I_{GND}$

→ *Abbreviations, p. 64*

Additional Power Supply via Power Supply Unit at Connection V_S

If the control unit cannot supply sufficient current or the supply current of the control unit must be independent of the output level, and additional power supply unit can be connected to connection U_B.

The output stage of P16890 is supplied via the U_B operating voltage connection. For the voltage output, U_B directly determines the high level of the output signal.

For the current output, U_B influences the output saturation limit.

When dimensioning the load resistance at the output, U_B must be taken into account accordingly.

Here, the supply voltage of the control unit remains independent of the output level.

Current Output

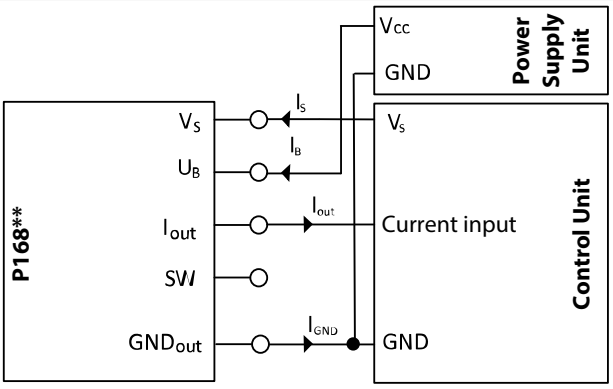

$I_B \approx I_{out}$

$I_S \approx I_{GND} \approx$ Constant

Voltage Output

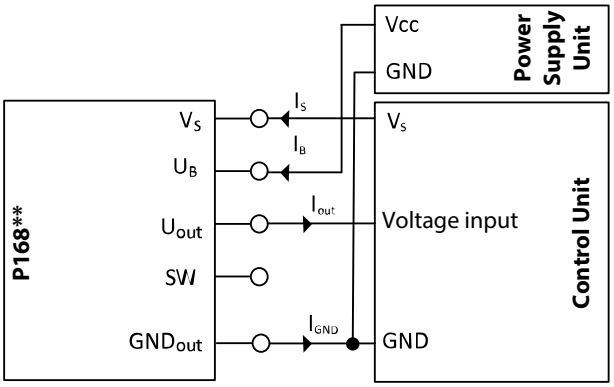

$I_B \approx I_{out}$

$I_S \approx I_{GND} \approx$ Constant

→ *Abbreviations, p. 64*

2.8 Shielding Concept

P16890 decouples speed signals from a primary signal circuit in a non-interacting manner. The primary signal circuit is retained and the speed sensor remains galvanically connected to the primary control unit (Control Unit 1). Here, there is no galvanic isolation between the speed sensor and the primary control unit. The shielding conditions and interference current conditions of the primary speed signal circuit remain unchanged. P16890 outputs its signal to a signal circuit with a secondary control unit (Control Unit 2).

⚠ **WARNING! Interference in signal transmission from unconnected shielding.** The screen terminals (screens) must be connected and must not remain unassigned.

Two basic circuits for speed signal processing are available as described in the following chapters.

2.8.1 Decoupling the Signals of a Speed Sensor with Current Output

The figure shows the principle wiring for the serial decoupling of signals from a primary speed signal circuit with current-generating speed sensors.

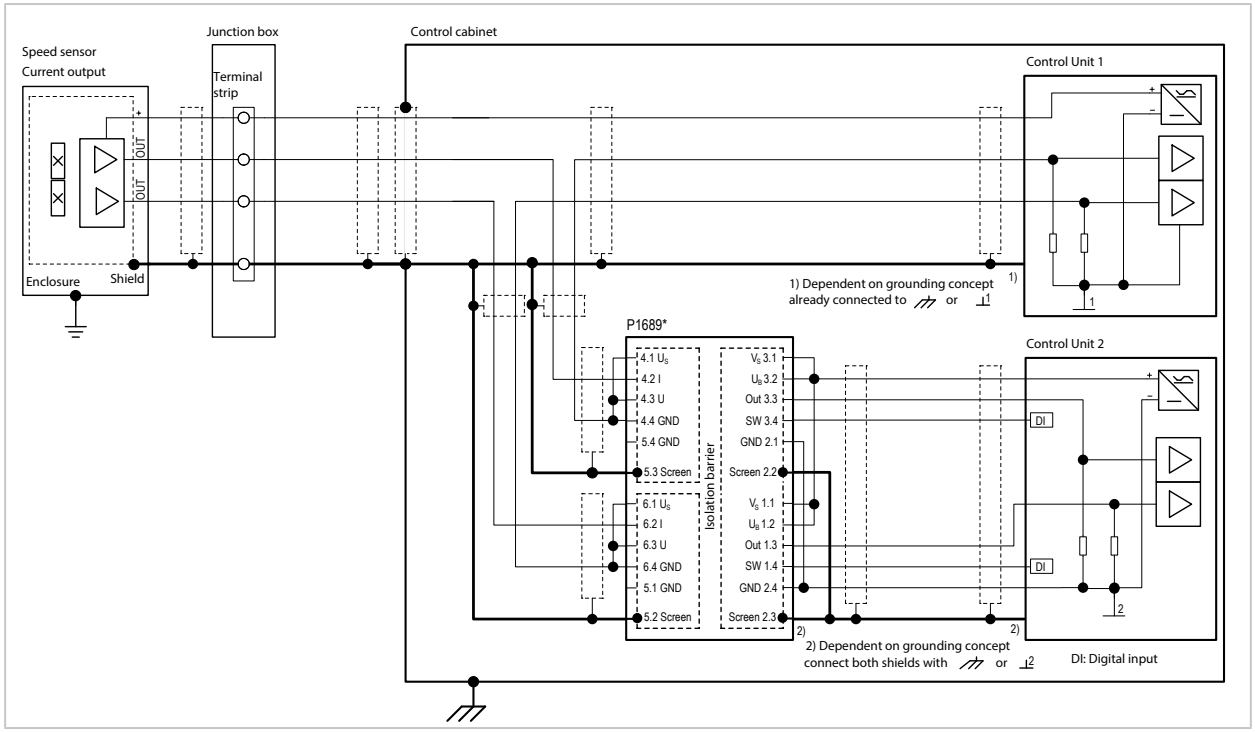

Note: For speed sensor with current output, the input-side shield connections (screen) on P16890 must not be connected to the GND connections.

2.8.2 Decoupling the Signals of a Speed Sensor with Voltage Output

The figure shows the principle wiring for the parallel decoupling of signals from a primary speed signal circuit with voltage-generating speed sensors.

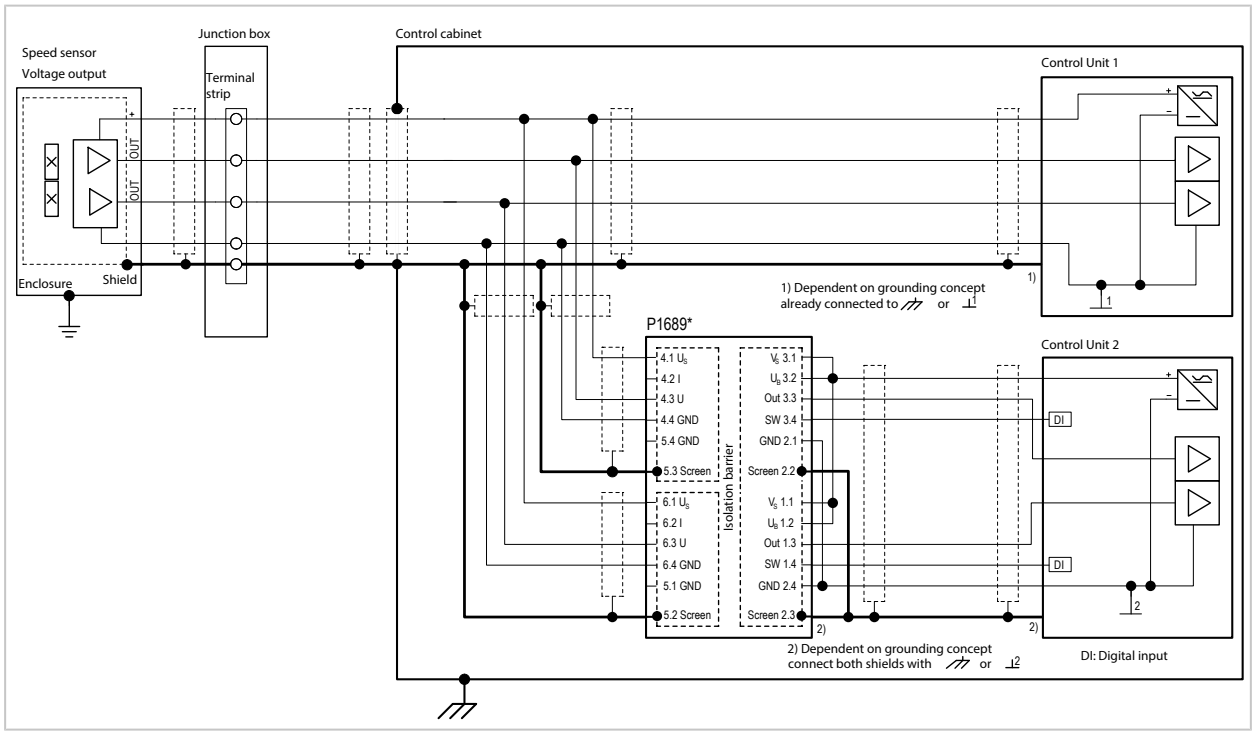

2.8.3 General Information on P16890 Shielding

The P16890 has a double shield design for input and outputs that can be adapted to different applications.

Each input and each electrically isolated output is equipped with two nested shields:

- Inner shield: Firmly connected to the GND terminal
- Outer shield: Connected to the assigned screen terminal

The two shields have no internal connection to each other.

Since vehicle manufacturers and system integrators use different concepts for the electrical connection of speed sensors, the following versions are to be understood as general recommendations.

These instructions present basic principles for the integration of P16890. They should be supplemented to create an overall concept.

Take the following into account:

- Grounding concept and shield design of the system
- Speed sensor properties
- Speed sensor installation site
- Properties of the connected control unit

The figures show layouts optimized to minimize interference when decoupling the signals of a speed sensor with a current or voltage output.
→ *Decoupling the Signals of a Speed Sensor with Current Output, p. 26*,
→ *Decoupling the Signals of a Speed Sensor with Voltage Output, p. 26*

The internal electrical system of the speed sensor shown in the figures is surrounded by an inner shield that is not connected to the speed sensor housing. It represents the EMC ideal case.
→ *Decoupling the Signals of a Speed Sensor with Current Output, p. 26*,
→ *Decoupling the Signals of a Speed Sensor with Voltage Output, p. 26*

The speed sensor cable is inserted into the rolling stock body using a plug-in connection or a junction box with terminal strip. Inside the rolling stock body, the signal is routed via a shielded cable to an EMC-compliant control cabinet that contains the control unit that processes the speed signals and more. The control cabinet enclosure is routed to an EMC-compatible, low-interference potential. The shielded speed sensor cable should be inserted into the control cabinet using a cable gland that has full contact with the shield. Inside the control cabinet, the signal is routed to a branch point via shielded cables. From there it is routed to the control unit or inputs of P16890.

2.8.4 Fundamentals of Shielded Cables and Signal Routing

Shielded cables are required for:

- Connecting speed sensors to the inputs of P16890
- Connecting the outputs of P16890 to control units
- A separate power supply unit, if necessary

→ *Signal Cables at the P16890 Output, p. 30*, → *P16890 Power Supply, p. 30*

Requirements for shielded cables:

- Unshielded cable sections must be as short as possible.
- The mechanical and electrical properties must be suitable for the respective application.
- The cables should not be routed parallel to power cables.
- A good shielding effect is achieved by fine braided shields with a high degree of coverage or a combination of metal film and braided shield.
- Twisted wire pairs should be used when each signal circuit uses its own wire pair.
- Shields should be routed to the same potential at both ends with low resistance in order to minimize magnetic interference.
  - Bilateral connection to ground potential, frame potential, or system ground is suitable for this purpose.
  - The differences in potential between the potential points should be as small as possible.
  - The shield can be connected on a large scale and with low resistance using special screen terminals that securely contact the shield to the respective potential connection.
  - Cable glands with contact to the shield are also suitable in conjunction with metallic casings.

If uniform shield potential is not available, undesired currents may develop that could lead to signal interference or damage to cables and control units.

To avoid this, we recommend the following measures:

- Prevent currents through cable shields: Equipotential bonding currents should be avoided, since they can cause signal interference. Sections with interrupted or missing shielding must be as short as possible.
- Use bilateral shield connection systematically: Bilateral shield connections usually offer better protection against magnetically induced interference than unilateral shield connections do. At the same time, there is a risk of compensating currents, which is why conscious consideration is necessary.
- Avoid directly connecting the cable shield to the sensor housing: If the cable shield in the speed sensor is directly connected to the speed sensor housing and it is attached to a point with a highly fluctuating potential, undesired compensating currents may develop. To prevent this, the cable shield should not be connected to multiple grounding points.
- Select additional grounding points with caution: If an additional grounding point is required, it must be located systematically: on the control unit, for example. In this case, check whether the control unit has inputs with electrical isolation for speed sensors.

Measures for Avoiding Problems with Potential

Note: Observe additional safety Instructions (e.g., SIL levels), if any. → *Safety Manual, p. 60*

1. Use of P16890 between speed sensor and signal load

- Reduces signal problems and interference current on cable shields.
- The electrically isolating design prevents the routing of common-mode interference.
- The robust electrical isolation and shield design minimizes shielding problems and interference currents.
- Double shielding prevents signal interference and improves EMC-compatibility.
- Effective shielding potentially eliminates the need for additional measures.

If P16890 is used to decouple signals from a primary speed signal circuit, the wiring must ensure that the electrical properties of the primary speed signal circuit do not change. P16890 does not change the signals and ensures non-interacting routing to a secondary speed signal circuit.

Due to the electrically isolating design of P16890, there are no internal connections between the shield connections and other potentials like DIN rail potential, frame potential, and grounding potential. If this type of connection is necessary, it must be established externally.

Effective shielding against external electrical fields is achieved when at least one end of the cable shield is grounded. Ground should be established at a suitable point for minimizing interference. If consistent grounding is not possible or a different shield design is necessary, check whether alternative measures for deflecting undesired interference current are necessary.

2. Use of an equipotential bonding line

- A low-resistance cable with a high current-carrying capacity connects different potentials at both ends of the cable shield.

3. Isolate the potential at the ends of the cable shield

- Using a speed sensor with floating shield
- Using a control unit with electrically isolated signal input
- Avoiding a direct shield connection between the speed sensor and control unit to reduce differences in potential

4. Interrupt the cable shield

- If necessary, the cable shield can be interrupted at the point of introduction into the rolling stock body, for example.

Note: This reduces the shielding effect and can have a negative impact on signal quality.

If the consistent connection of the cable shield is interrupted on the way between the speed sensor and signal load – for example, at the point of introduction into the rolling stock body – this can reduce the shielding effect. It can have a negative effect on signal quality, particularly in the case of magnetic interference. If high potential differences with AC components or other strong potential fluctuations exist between the isolated shield sections, additional signal interference may occur.

The choice between unilateral or bilateral shield connections (for the cable routed to the speed sensor) depends on the electrical conditions of the system. If the cable shield is directly connected with the speed sensor housing and the housing is on an electrically highly fluctuating potential, measures for preventing compensating current are necessary. This can be achieved with suitable electrical isolation or alternative shield connections.

2.8.5 Signal Cables at the P16890 Output

Signals should be transmitted to the secondary control unit and power supply of P16890 with only one shielded cable and along the shortest possible route. Both ends of the cable shield must be designed for a low-interference potential.

If P16890 and the secondary control unit are installed in the same control cabinet designed for EMC compatibility, in individual cases the connection does not need to be shielded if electromagnetic interference does not develop.

2.8.6 P16890 Power Supply

The power supply must be free from interference and voltage fluctuations, which can occur in on-board electrical systems particularly. When speed signals are decoupled from the secondary control unit, the power supply of P16890 should come from this control unit. If this is not possible, a power supply unit with electrical isolation that supplies stable voltage should be used.

3 Configuration

3.1 Terminals

The various wiring options make it possible to adjust the load of the control unit such that it equals the load of a speed sensor. → *Voltage Supply, p. 21*

3.2 DIP Switches

Note: The factory settings are indicated on the nameplate.

The input and output functions of P16890 are configured individually using the DIP switches on the product. The assignment of the functions to the DIP switch positions is listed on the nameplate.

⚠ WARNING! In the case of safety-related applications, changing the DIP switches during operation has a negative affect on the safety concept. Do not convert ranges during operation.

⚠ WARNING! Shock potential: Do not touch. Do not convert ranges during operation.

NOTICE! Product damage due to electrostatic discharge (ESD) when changing DIP switch positions. Implement protective measures against electrostatic discharge.

01. Set DIP switches in accordance with the desired function.
02. After configuration is completed, check that the product functions correctly.

DIP Switches at Input

Overview of DIP switch functions at the input:

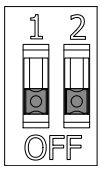

DIP switches Input 1-2 and Input 2-2

- Selecting current or voltage input

Note: The switches Input 1-1 and Input 2-1 have no function.

Input signal	Input x-2
Voltage input	ON
Current input	OFF

DIP Switches at Output

Overview of DIP switch functions at the output:

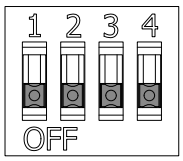

DIP switches Switch 1 and Switch 2

- Selecting current or voltage output
- For current output: Selecting high level 14 mA or 20 mA

Output signal	Switch x-2	Switch x-4
Voltage output	ON	ON/OFF[1)]
Current output	OFF	OFF: 14 mA
	OFF	ON: 20 mA

- Selecting DOT output or frequency-divided output with retention of the 90° phase shift
- Selecting reference edge for the information about the direction of rotation

Out 2 (reference channel)	Out 1	Reference edge	Switch 1-1	Switch 1-3	Switch 2-1	Switch 2-3	Mode[2)]
$f_{out}=f_{in}$	DOT	Rising	ON/OFF[1)]	OFF	OFF	ON	1
		Falling	ON/OFF[1)]	OFF	ON	ON	2
	$f_{out}=f_{in}/2$	Undefined[3)]	OFF	ON	ON/OFF[1)]	ON	
	$f_{out}=f_{in}/4$	Undefined[3)]	ON	ON	ON/OFF[1)]	ON	
$f_{out}=f_{in}/2$	DOT	Falling	OFF	OFF	ON	OFF	
		Rising	OFF	OFF	OFF	OFF	
	$f_{out}=f_{in}/2$	Rising	OFF	ON	OFF	OFF	3
		Falling	OFF	ON	ON	OFF	4
$f_{out}=f_{in}/4$	DOT	Rising	ON	OFF	OFF	OFF	
		Falling	ON	OFF	ON	OFF	
	$f_{out}=f_{in}/4$	Rising	ON	ON	OFF	OFF	5
		Falling	ON	ON	ON	OFF	6

→ *Product Code, p. 10*

See also

→ *Nameplate, p. 11*

1) Can be set to either ON or OFF. Switch setting is irrelevant.

2) Frequently used configuration. → *Signal Diagrams, p. 33*

3) Unusual configuration.

3.3 Signal Diagrams

The signal diagrams present the output signals for different modes. The falling edge of input channel In 2 (a+b) is the reference time for signal evaluation.

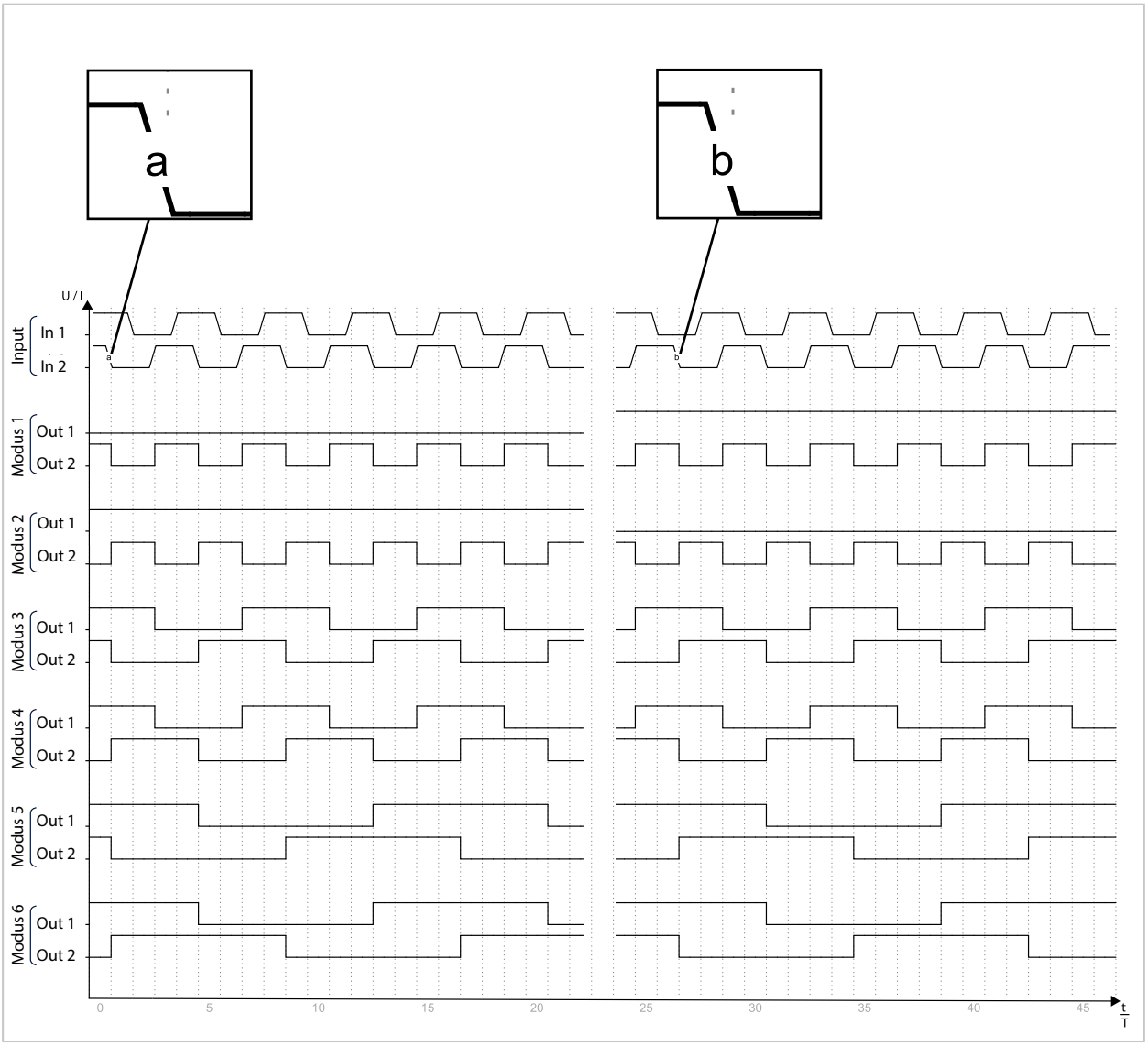

4 Installation and Commissioning

4.1 Mounting

The following conditions must be complied with:

- The product is approved for installation in closed electrical operating areas like underfloor containers, roof boxes, and the engine rooms of rolling stock.
- Inside rolling stock, the product many only be installed and operated in closed control cabinet that can be locked.
- In industrial plants, the product many only be installed and operated in closed control cabinet that can be locked.

P16890 can be mounted in any installation orientation as follows:

- On 35 mm DIN rails, stackable (without using a DIN rail bus connector),
- On level surfaces with accessory ZU1472 Wall-mount adapter.

Mounting on 35 mm DIN Rail

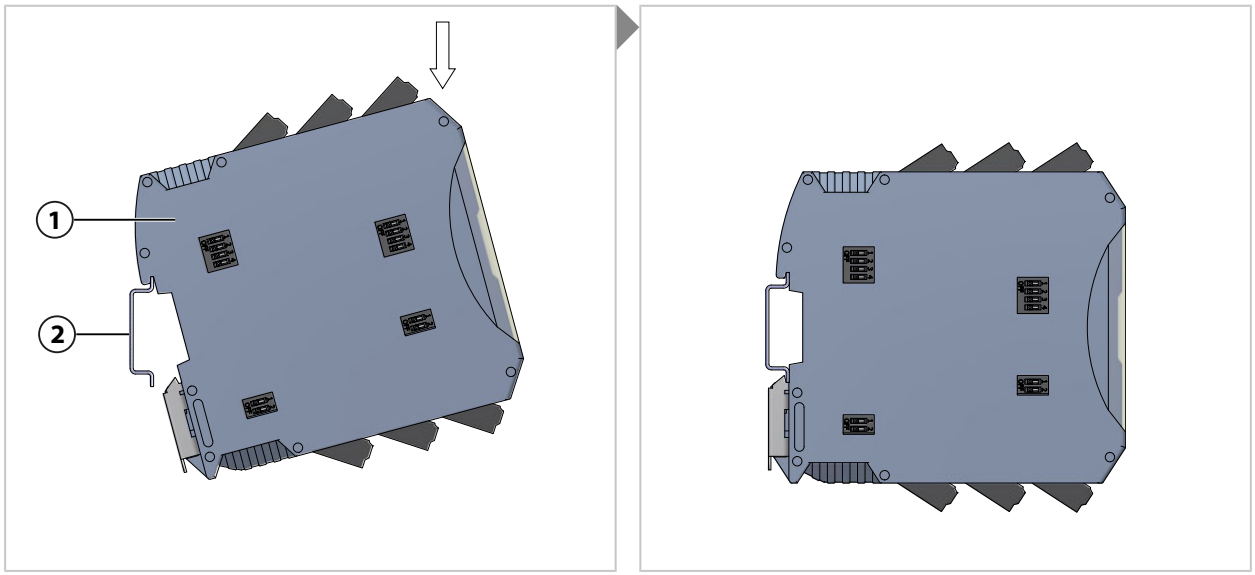

01. Snap the P16890 **(1)** onto the 35 mm DIN rail **(2)**.

Mounting on Level Surfaces with Accessory ZU1472 Wall-Mount Adapter (order separately)

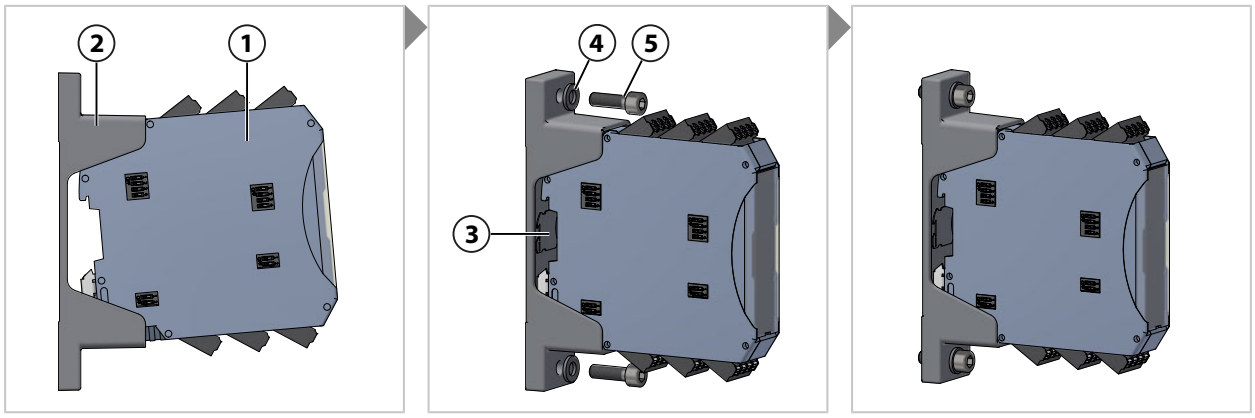

Note: The miniature illustration **(3)** on the wall-mount adapter also represents the correct installation orientation of P16890 **(1)** in the ZU1472 Wall-mount adapter **(2)**.

Required aids: Two M6 screws and suitable washers.

01. Click P16890 **(1)** into accessory ZU1472 **(2)**.
02. Position the ZU1472 **(2)** with the P16890 **(1)** at the installation location.
03. Fasten the ZU1472 **(2)** using the two M6 screws **(5)** and washers **(4)**.
04. Tighten the M6 screws **(5)** with 5 Nm.

See also

→ *Dimension Drawings, p. 48*

4.2 Terminal Assignment

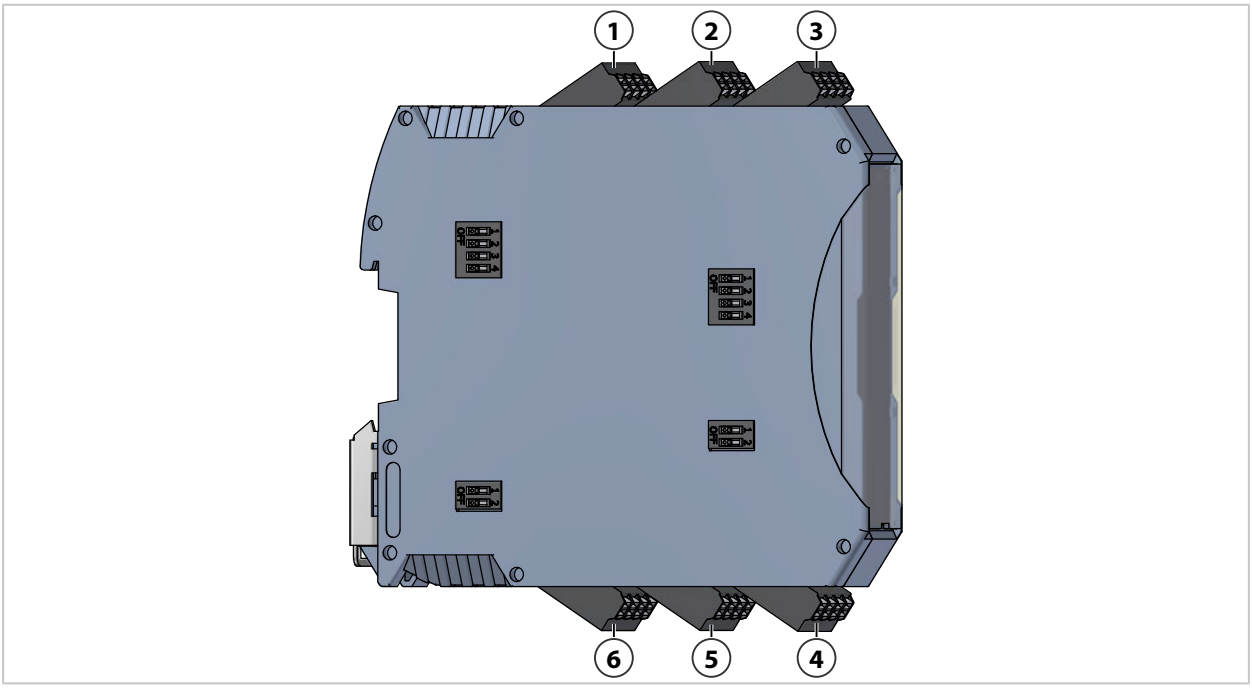

1	Terminal 1 (1.1...1.4)	4	Terminal 4 (4.1...4.4)
2	Terminal 2 (2.1...2.4)	5	Terminal 5 (5.1...5.4)
3	Terminal 3 (3.1...3.4)	6	Terminal 6 (6.1...6.4)

Terminal	Label	Input/Output	Channel	Function
1.1	V_S	Output	2	Power supply
1.2	U_B	Output	2	Power supply (output driver)
1.3	Out	Output	2	Output signal (current or voltage)
1.4	SW	Output	2	Switch output, opens in case of detected error.
2.1	GND	Output	1	Ground
2.2	Screen	Output	1	Shield
2.3	Screen	Output	2	Shield
2.4	GND	Output	2	Ground
3.1	V_S	Output	1	Power supply
3.2	U_B	Output	1	Power supply (output driver)
3.3	Out	Output	1	Output signal (current or voltage)
3.4	SW	Output	1	Switch output, opens in case of detected error.
4.1	U_S	Input	1	Voltage reference for voltage input
4.2	I	Input	1	Current signal from speed sensor
4.3	U	Input	1	Voltage signal from speed sensor
4.4	GND	Input	1	Ground, speed sensor
5.1	GND	Input	2	Ground, speed sensor
5.2	Screen	Input	2	Shield
5.3	Screen	Input	1	Shield
5.4	GND	Input	1	Ground, speed sensor
6.1	U_S	Input	2	Voltage reference for voltage input
6.2	I	Input	2	Signal current from speed sensor
6.3	U	Input	2	Signal voltage from speed sensor
6.4	GND	Input	2	Ground, speed sensor

Block Diagram

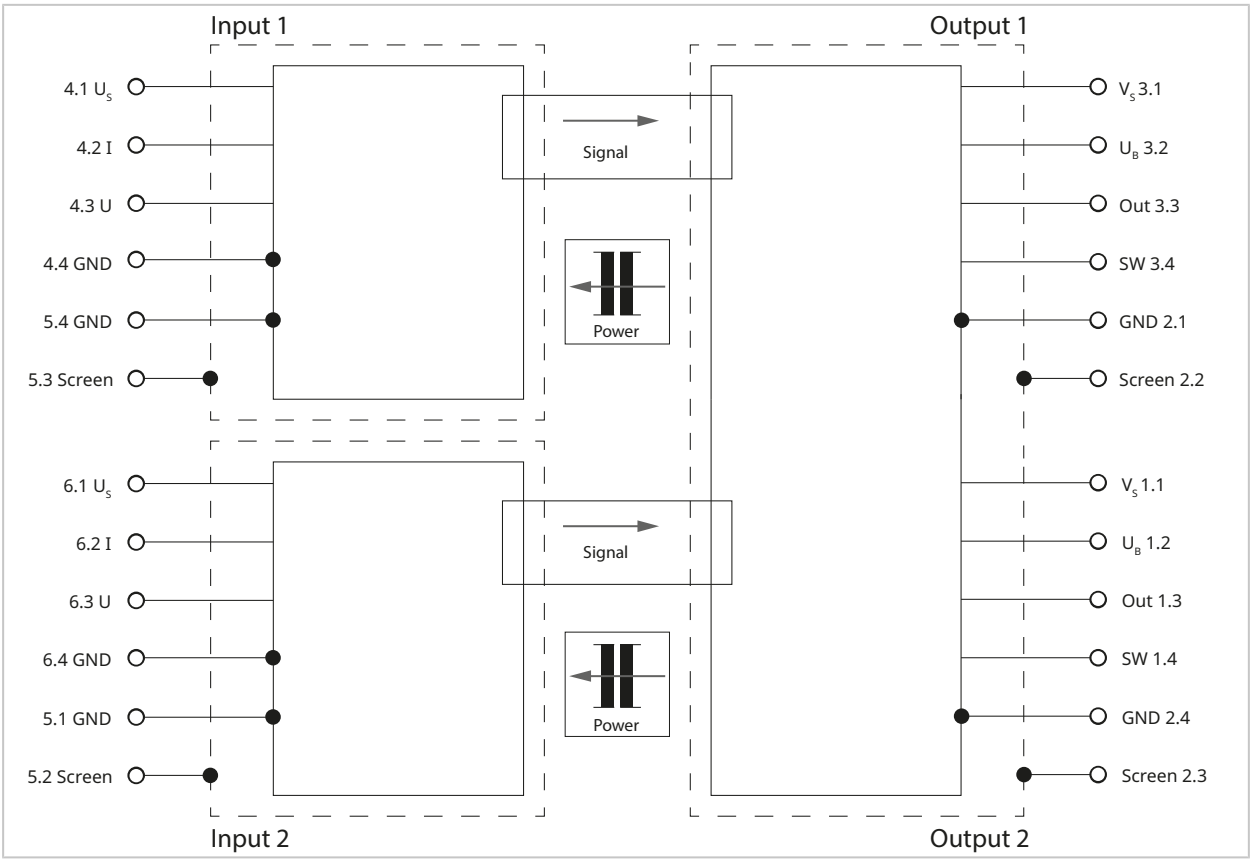

See also

→ *Abbreviations, p. 64*

4.3 Electrical Installation

Shielding Connection

⚠ **WARNING! Interference in signal transmission from unconnected shielding.** The screen terminals (screens) must be connected and must not remain unassigned.

Notes on connection:

- The screen terminals (screen) must be connected to the intended reference potential with low impedance.
- For speed sensors with current output, the screen terminals (screen) must not be connected to the GND connections.
- For speed sensors with voltage output, the shield must be connected to the shield potential of the system.
- Unshielded cable sections must be as short as possible.

⚠ WARNING! Voltages dangerous to touch. Do not install the product when it is carrying voltage.

01. Disconnect the electrical system from the mains.
02. Secure the electrical system against reconnection.
03. Verify that the electrical system is dead.
04. Ground and short-circuit the electrical system.
05. Cover neighboring, live parts with insulating materials or place barriers around them.
06. Connect the jumpers in accordance with the selected function or shield design.
    → *Insertable Jumpers, p. 40*
07. Prepare the cable.
    Note: Use only shielded copper wires. The cables must be temperature resistant to at least 75 °C (167 °F), unless higher requirements result from the application. The wires must be rated for the limit value of the circuit's protective device.
    Note: When choosing the cable, the influence of the cable parameters on the signal (e.g., capacitance or inductance) must be taken into account.
08. Strip 10 mm from the cable ends. Apply ferrules on the stranded cables.

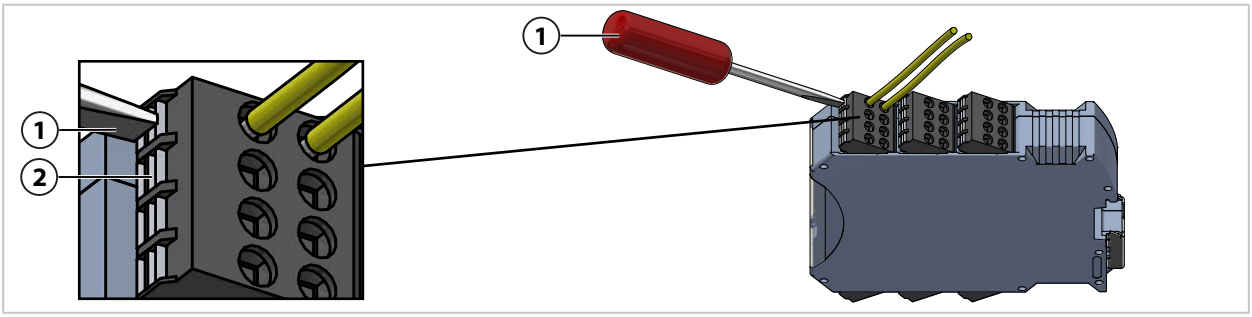

09. Insert the cable into the mechanical coded two-tier terminal (push-in version) without tools. If it is difficult to insert the cable, push in the push button **(2)** using a screwdriver **(1)** in order to open the two-tier terminal and then insert the cable.

Note: Input signals 1 and 2 must come from the same speed sensor. The output signals may only go to one control unit.

10. Connect the P16890 in accordance with the chosen wiring (signal type and shielding concept).
11. Check that the cable is securely attached.
12. Reset the electrical system to its original state. Reverse the sequence of measures for ensuring voltage-free operation.

Conductor cross-sections
0.2 … 1.5 mm², AWG 24 … 16
Stranded with ferrule or solid

See also
→ *Terminal Assignment, p. 36*

4.4 Insertable Jumpers

The cables and jumpers are connected to the two-tier terminals (push-in version).
→ *Terminal Assignment, p. 36*

2-pin and 3-pin jumpers are available:

- 2-pin jumper:
  - To connect connection U_B with connection V_S
  - Connection of the GND and Screen terminals, depending on selected shield design
- 3-pin jumper:
  - To connect terminals U_S, U and GND when the current input is used

See also
→ *Voltage Supply, p. 22*

4.5 Commissioning

01. Set the required function using the DIP switches. → *DIP Switches, p. 31*
02. Mount the P16890. → *Mounting, p. 34*
03. Install the P16890 electrical system. → *Electrical Installation, p. 38*
04. Check the functionality of P16890.

5 Operation

5.1 LED Signaling

Two LEDs per channel (channel 1/channel 2) are located on the device front.

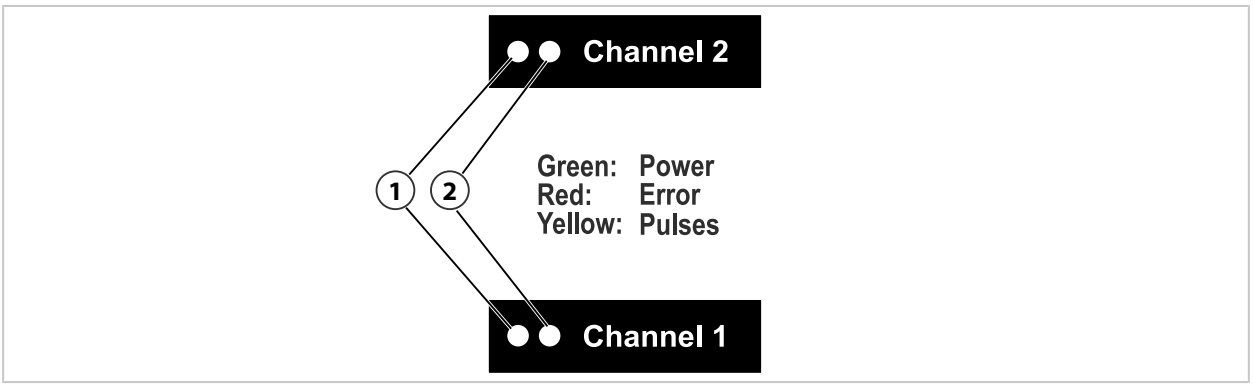

1 LED left: green/red 2 LED right: yellow

Green	LED left	Power indicator, operating voltage present.
Red	LED left	Error detected.
Yellow	LED right	Pulse signaling. LED flashes corresponding to the output pulses. At high pulse frequencies, this is perceived as permanently illuminated.

5.2 Signal Behavior for Input Errors

The following signal paths show the logical input signals, output signals, and error signals of diagnostic switch SW for absent or missing input pulses.

If the current input is used as the input signal and the signal current falls below 2.2 mA, for example in case of cable breakage, the SW diagnostic switch indicates a fault. → *Troubleshooting, p. 44*.

Failure Input Channel In 1

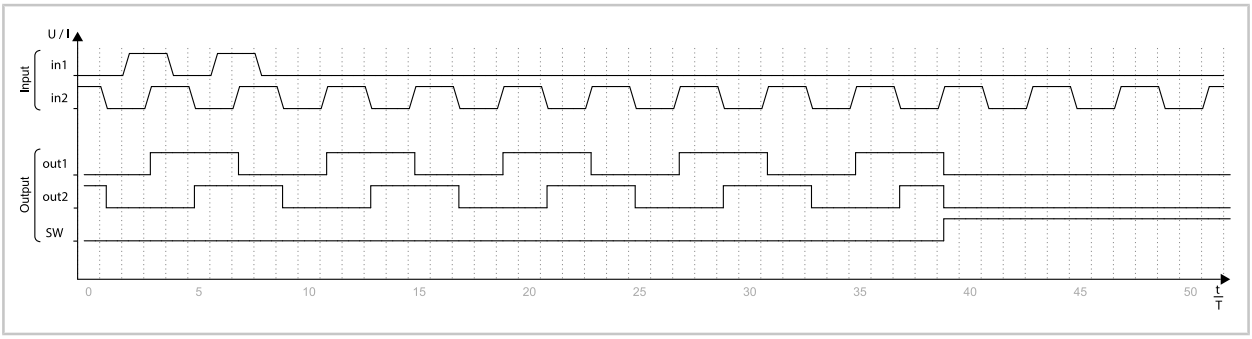

Failure Channel In 1 Single Pulse

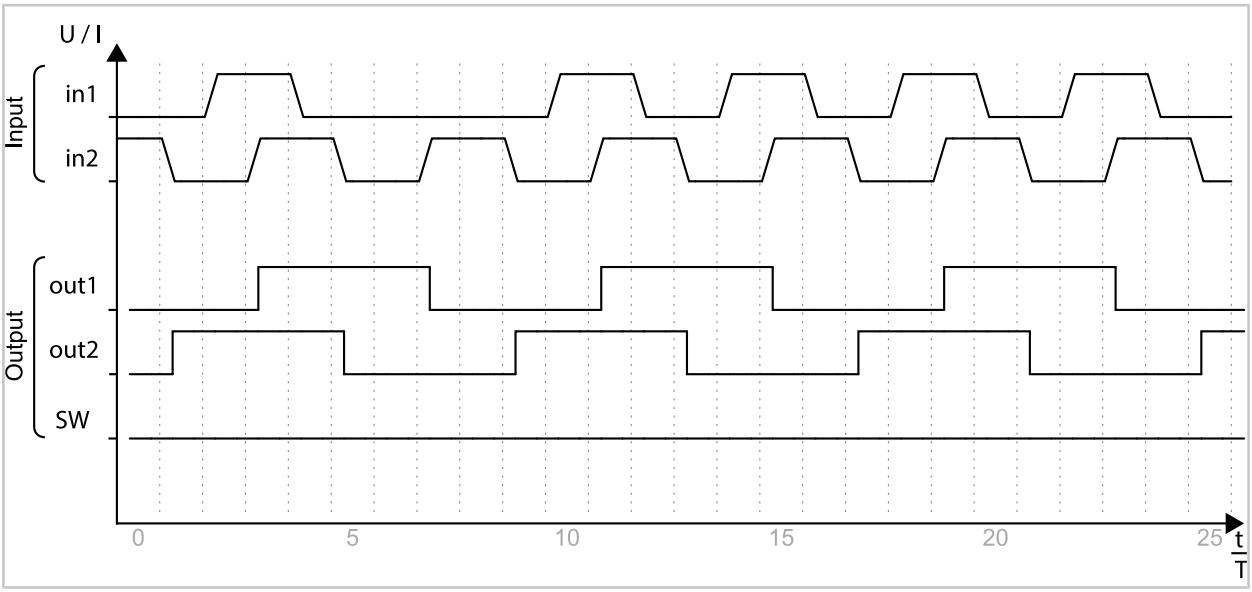

Failure Input Channel In 2

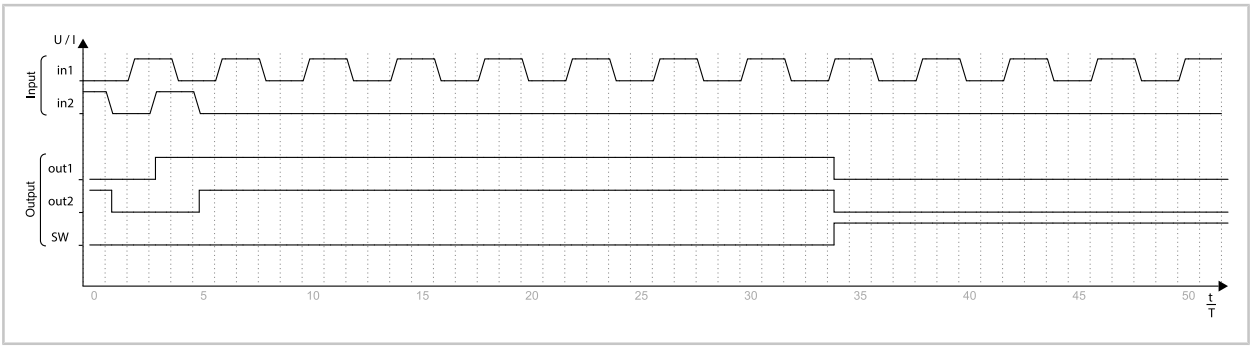

Failure Channel In 2 Single Pulse

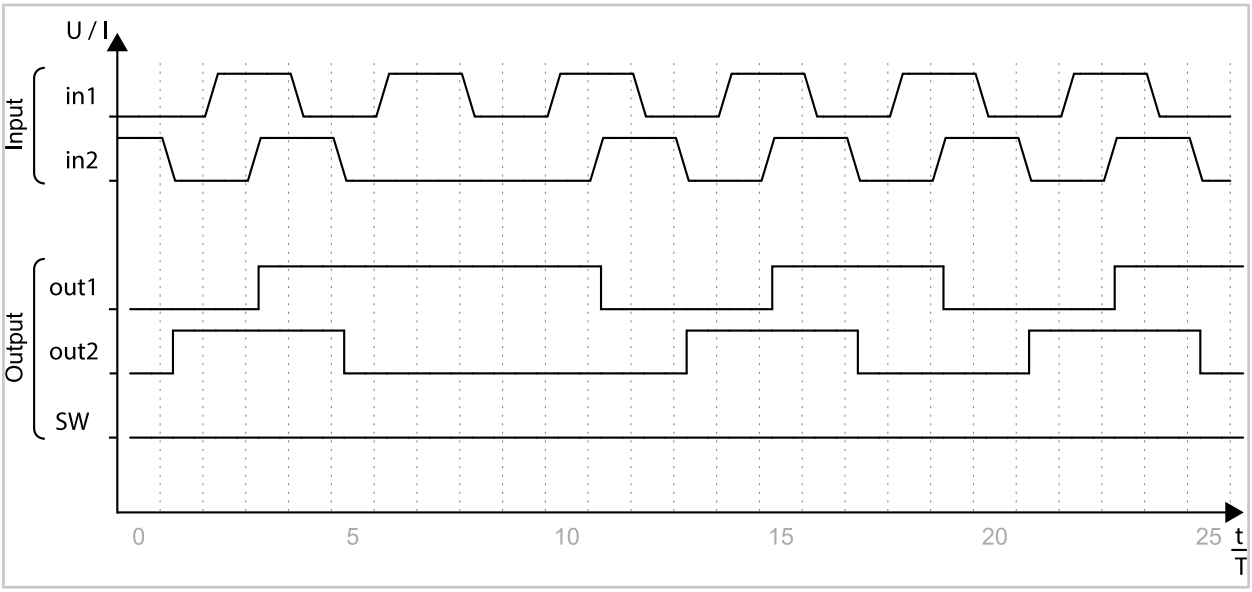

For up to seven consecutive missing single pulses, the signal diagrams for missing single pulses are analog.

5.3 Maintenance and Repair

Maintenance

The devices are maintenance-free. They are not to be opened.

Repair

The product cannot be repaired by the user. The local contact persons and information on the repair procedure can be found at www.knick-international.com.

Storage

Familiarize yourself with the information on storage temperatures and relative humidity in the Specifications.

6 Troubleshooting

USE CAUTION WHEN CONDUCTING ANY TROUBLESHOOTING. FAILURE TO ABIDE BY THE REQUIREMENTS SET FORTH HEREIN MAY RESULT IN SERIOUS INJURY OR DEATH, AS WELL AS DAMAGE TO PROPERTY.

Failure Condition	Possible Cause	Remedy
The left LED lights up red and switch output SW is open.	Power supply of speed sensor is not connected. Note: The speed sensor is not supplied with voltage by P16890.	Check connection.
	Voltage reference for voltage input U_S: Threshold value fallen short of	Check connection.
	Error detection at current input: Threshold value fallen short of	Check speed sensor, cable, and connections.
	Error detection at current input: open cable	Check cable and connections.
	Unequal number of pulses per channel	Check speed sensor. Check shielding.
	Internal device failure	Replace device.
The left LED flashes red and switch output SW opens in sync with the output frequency.	Short circuit at voltage output	Check cable and connections.
	Internal device failure	Replace device.
The LEDs do not light up and switch output SW is open.	Undervoltage at V_S	Check the auxiliary power.
Output voltage is too low.	Faulty power supply	Check U_B.
	Load resistance at output too small	Check connections for short circuit. Check value of load resistance at output.
A fault is not signaled.	Defect at switch output	Replace device.
The signal output does not follow the signal input.	Missing load resistance at output (current output)	Connect load resistance at output correctly.
	Faulty configuration	Check configuration.
	Disconnection	Check cable and connections.

Further support for troubleshooting is available at → *support@knick.de*.

See also
→ *DIP Switches, p. 31*
→ *LED Signaling, p. 41*
→ *Specifications, p. 49*

7 Decommissioning

The product must be shut down and secured against starting up again if the following occurs:

- Visible damage to the product
- Failure of electrical function
- Storage at temperatures outside the specified temperature range

The product may only be started up again after a professional routine test by the manufacturer.

7.1 Dismounting

⚠ **WARNING! Voltages dangerous to touch.** Do not disassemble the product under voltage.

01. Disconnect the electrical system from the mains.
02. Secure the electrical system against reconnection.
03. Verify that the electrical system is dead.
04. Ground and short-circuit the electrical system.
05. Cover neighboring, live parts with insulating materials or place barriers around them.
06. Check the input of P16890 for voltage-free operation.
07. Switch off the power supply.

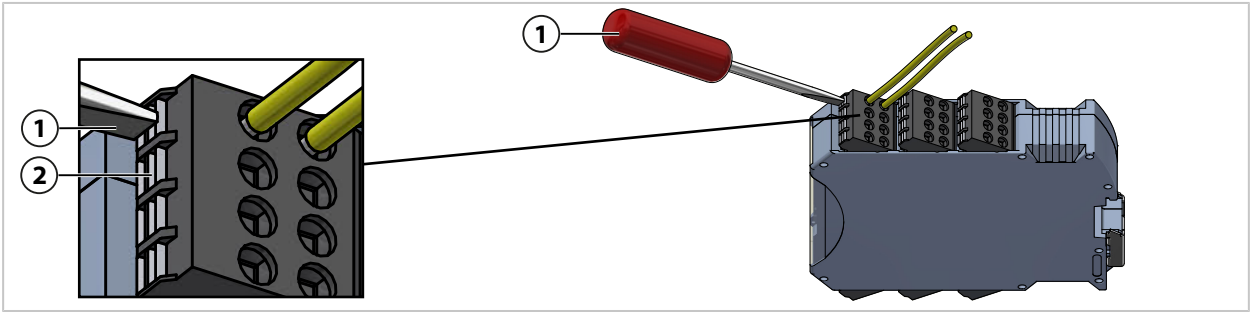

08. Push in the push button **(2)** using a screwdriver **(1)** to open the two-tier terminal and remove the cable.
09. Remove the P16890 enclosure.

Removal from 35 mm DIN Rail

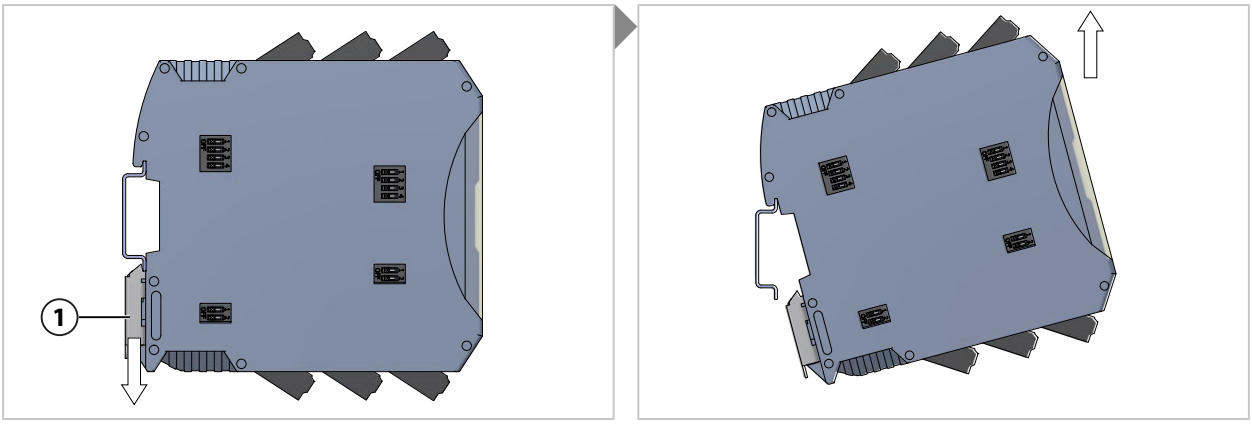

1. Pull down the metal foot catch **(1)**.
2. Lift the product off the DIN rail.

Removal with Wall-Mount Adapter

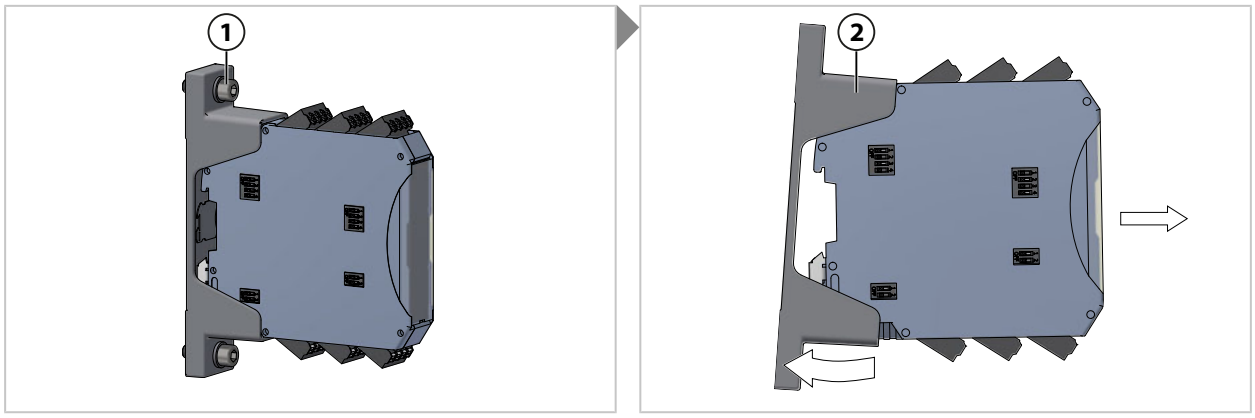

1. Loosen the M6 screws **(1)**.
2. Slightly bend up the wall-mount adapter **(2)** on one side to separate it from the product.

7.2 Return Delivery

For return delivery, follow the information on our website www.knick-international.com.

7.3 Disposal

To dispose of the product properly, follow the local regulations and laws.

Customers can return their electrical and electronic waste devices.

For details on how to return and dispose of electrical and electronic devices in an environmentally friendly manner, please refer to the manufacturer's declaration on our website. If you have any queries, suggestions, or questions about how Knick recycles electrical and electronic waste devices, please send us an email: → *support@knick.de*

8 Accessories

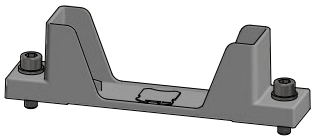

ZU1472 Wall-mount adapter, optional

Accessory ZU1472 enables the installation of the P16890 on a level surface.

Use two M6 screws (EN 912/ISO 4762) with washers (EN 125/ISO 7089) to mount the wall-mount adapter. (Screws and washers not included in the package contents.)

9 Dimension Drawings

Note: All dimensions are given in millimeters [inches].

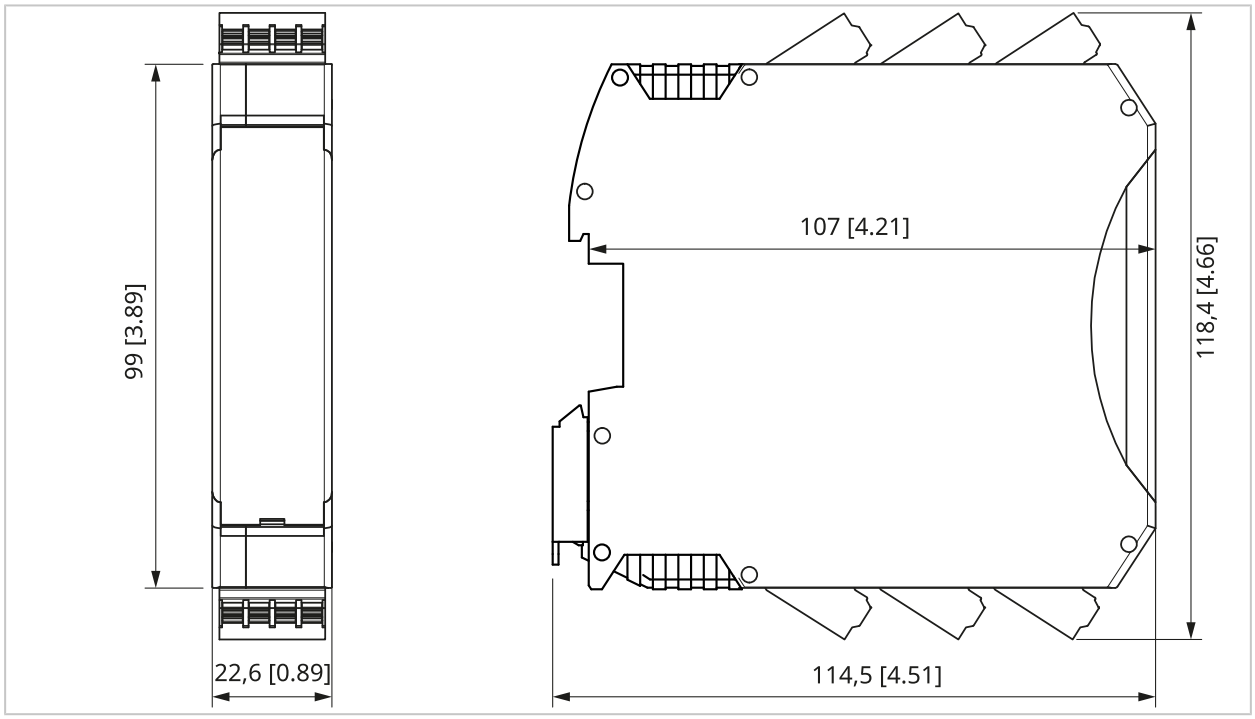

The accessory ZU1472, "Wall-mount adapter," is available as an option and not included in the P16890 package contents. The hole spacing for accessory ZU1472, "Wall-mount adapter," is 124 mm [4.88"].

→ *Accessories, p. 47*

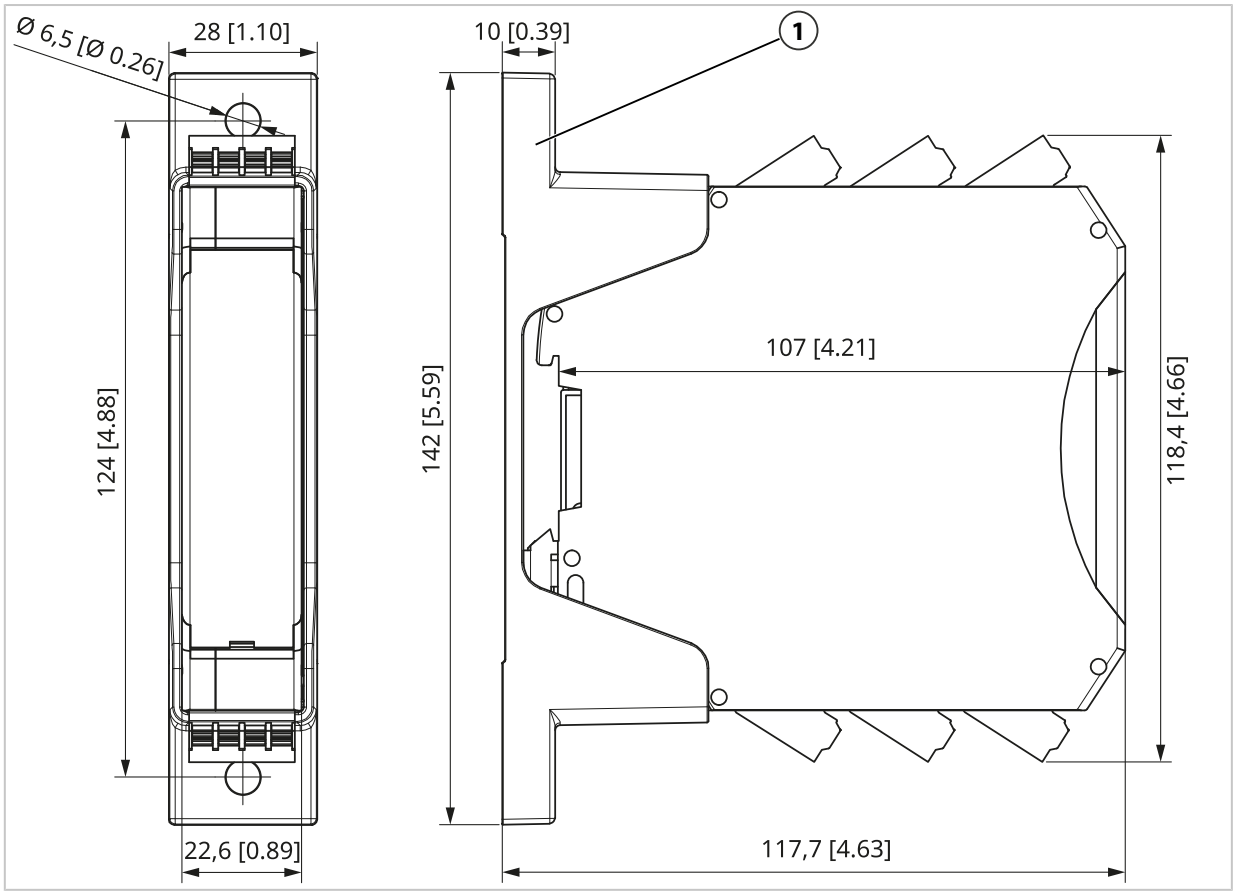

1 ZU1472 wall-mount adapter

10 Specifications

10.1 Limit Values

The specifications listed here must be complied with. Deviations can lead to destruction of the product.

Unless otherwise indicated, all voltage vales refer to the associated GND.

Operating temperature, enclosure		Max. 95 °C (203 °F)
Voltage reference for voltage detection U_S	Min. –35 V	Max. 35 V
Current input	Min. –200 mA	Max. 200 mA
Voltage input	Min. –35 V	Max. 35 V
Operating voltage supply V_S	Min. –35 V	Max. 35 V
Operating voltage output stage U_B	Min. –35 V	Max. 35 V
Output OUT	Min. –0.5 V	Max. U_B + 0.5 V
	Short-circuit-proof	
Switch output SW	Min. –0.5 V	Max. 35 V
		Max. 100 mA

10.2 Recommended Operating Conditions

The specified characteristic data apply under the recommended operating conditions listed.

Unless otherwise indicated, all voltage vales refer to the associated GND.

Ambient temperature, side-by-side operation	Min. –40 °C (–40 °F)	Max. 70 °C (158 °F)	Permanent
		Max. 85 °C (185 °F)	Short-term (10 min.)
Operating voltage supply V_S	Min. 10 V	Max. 33.6 V	
Operating voltage output stage U_B	Min. 10 V	Max. 33.6 V	
	Or open for internal supply via V_S		
Ripple of operating voltage (peak value)		Max. 5 %	
Input frequency f_{in}	Min. 0 Hz	Max. 25 kHz	
Input duty cycle	Min. 25 %	Max. 75 %	
Input level:			
U High	Min. 0.83 × U_S	Max. U_S	
U Low	Min. 0 V	Max. 0.17 × U_S	
I High	Min. 12 mA	Max. 30 mA	
I Low	Min. 4 mA	Max. 9.5 mA	

10.3 Input

Input signal	Voltage U or current I
Waveform	Square
Input frequency f_{in}	0 ... 25 kHz
Reference potential	GND_{in}

10.3.1 Voltage Reference

Voltage reference U_S	10 ... 33.6 V
Error detection open cable U_S	< 8 ... 10 V; typically 9.45 V
Input resistance	≥ 120 kΩ
Input capacitance	≤ 100 pF

10.3.2 Voltage Input

Input voltage	0 ... U_S
Input switching level	Low: min. 27 % of U_S
	High: max. 77 % of U_S
Input resistance	≥ 120 kΩ
Input capacitance	≤ 100 pF

10.3.3 Current Input

Input current	6 ... 20 mA
Input switching level at Low = 6/7 mA	Low: min. 9.025 mA
Input switching level at High = 14/20 mA	High: max. 12.075 mA
Error detection open cable	< 1.8 ... 2.6 mA; typically 2.2 mA
Input resistance	< 30 Ω

10.4 Output

Output signal	Voltage U or current I
Waveform	Square
Reference potential	GND_{out}
Signal conversion options	Current → current
	Voltage → voltage
	Current → voltage
	Voltage → current

10.4.1 Voltage Output

Voltage level	Low: < 1 V (at max. 20 mA)
	High: U_B ... U_B – 2 V (at max. 20 mA)
	High (U_B open): > 5.5 V (at max. 20 mA)
Rise time	$T_{10...90}$ ≤ 10 µs (pulse edge slope for ohmic loads)
Fall time	$T_{90...10}$ ≤ 10 µs (pulse edge slope for ohmic loads)

10.4.2 Current Output

Current level High level dependent on configuration	Low: 4 ... 8 mA; typically 6 mA
	High = 14 mA: 12 ... 16 mA; typically 14 mA
	High = 20 mA: 18 ... 22 mA; typically 20 mA
Voltage of the current output (load voltage)	Max. U_B – 2 V Max. 4 V, if U_B open
Rise time	$T_{10...90}$ ≤ 10 µs (pulse edge slope for ohmic loads)

10.4.3 Switch Output

Technical version	Solid state relay
	Normally closed contact (N/C), opens if an error occurs
Voltage drop in closed state	< 0.3 V at 20 mA
Reverse current for open switch	< 10 µA at 24 V
Fault response time	< 1 s

10.5 Transfer Characteristics

Functional behavior	The output level follows the input level.
	Optional: Frequency division or output of the direction of travel (DOT)
Frequency division	2:1 or 4:1, switchable (90° phase shift retained)
Output of the direction of travel (direction of travel, DOT)	Channel 1: static binary signal Channel 2: frequency division 1:1, 2:1, or 4:1, switchable
Propagation time t_p	≤ 10 µs
Overlapping time t_{OL}	> 1 µs
Duty cycle distortion without frequency division Output signal against input signal	Max. ±10 % at 25 kHz
Duty cycle of the output signal with frequency division, independent from duty cycle of input signal	50%
Reaction of outputs to detected error:	
Current output	0 ... 100 µA
Voltage output	Low

10.6 Auxiliary Power

Requirements for the voltage source	Specific source in accordance with EN 50155 Section 5.1.1. For direct connection to a battery, burst immunity is restricted to evaluation criterion B. The influence on galvanic isolation must be considered.
Switching class in accordance with EN 50155	C1 for 24 V nominal voltage
Interruption class of power supply unit in accordance with EN 50155	S1 for 24 V nominal voltage
Electrical safety	All connected current and voltage circuits must meet the SELV, PELV, or EN 50153 Section I requirements.
Supply of the output	V_S: Supply of the P16890[1)]
	U_B: Supply of output driver[2)]
Power supply	V_S: 10 ... 33.6 V
	U_B: 10 ... 33.6 V
DC ripple factor at V_S	Max. 5 % to 1 kHz
Current through U_B per channel	Current output: max. 5 mA + I_{out}
	Voltage output: max. 5 mA + U_{out}/R_L
Power consumption through V_S per channel	Max. 600 mW
Power consumption total device (V_S and U_B)	Max. 2.2 W (2-channel product version)
	Max. 1.1 W (1-channel product version)
Warm-up time after switching on auxiliary power	≤ 50 ms
Inrush current at V_S per channel For V_S = 24 V, U_{out} at R_L = 1 kΩ	Max. 0.0002 A^2/s
Inrush current at U_B per channel For U_B = 24 V, U_{out} at R_L = 1 kΩ	Max. 0.0001 A^2/s
Breaking capacity within 1 s after switching off V_S and U_B	Level at current outputs: < 1 mA
	Level at voltage outputs: < 1 V

1) The entire device, including the input stage, is supplied via V_S.

2) The output stage can be supplied separately via the U_B connection. Next, the output voltage levels are set via U_B.

10.7 Isolation

Galvanic isolation	Input circuits against output circuits Input circuit channel In 1 against input circuit channel In 2 → *Details on Isolation, Isolating Distances, Contamination, and Overvoltage, p. 59*	
Type test voltage	Input against output:	8.8 kV AC/5 s
		5 kV AC/1 min
	Channel In 1 against channel In 2:	3 kV AC/1 min
	Output against outer shield of the output (screen):	710 V AC/5 s
		600 V AC/60 s
	Input against outer shield of the input (screen):	2,200 V AC/5 s
		700 V AC/60 s
	Input against DIN rail:	3,550 V AC/5 s
Routine test voltage	Input against output:	4.6 kV AC/10 s
	Channel In 1 against channel In 2:	1.9 kV AC/10 s
	Output against outer shield of the output (screen):	300 V AC/10 s
	Input against outer shield of the input (screen):	1,400 V AC/10 s
Reinforced insulation	→ *Details on Isolation, Isolating Distances, Contamination, and Overvoltage, p. 59*	
Rated insulation voltage	→ *Details on Isolation, Isolating Distances, Contamination, and Overvoltage, p. 59*	
Coupling capacity	Input → output	< 20 pF

10.8 Ambient Conditions

Installation location in accordance with EN 50155	Closed electrical operating area
	Installation location 1, Table C.1
	Weather-protected
Installation location in accordance with EN 61010	Enclosed control cabinet
Pollution degree in accordance with EN 50124-1	PD 2
Protective coating in accordance with EN 50155	Class PC2
Altitude class in accordance with EN 50125-1	AX up to 2,000 m above MSL
	Reduced isolation data for altitudes > 2,000 ... 4,000 m above MSL[1)]
Operating temperature class in accordance with EN 50155	OT4
Increased operating temperature class upon switching on in accordance with EN 50155	ST1, ST2
Temperature change class for fast temperature changes in accordance with EN 50155	H1
Ambient temperature: Operation	–40 ... 70 °C (–40 ... 158 °F)
	Short-term 85 °C (185 °F)
Ambient temperature: Storage and transport	–40 ... 90 °C (–40 ... 194 °F)
Relative humidity (operation, storage and transport):	
Annual mean value	≤ 75%
Continuous operation	15 ... 75%
Continuous on 30 days in the year	75 ... 95%
On the other days occasionally	95 ... 100%
Hazard level for indoor and outdoor applications	HL3 (combustible mass 0 g)
	Certified by independent test laboratory

1) On request

10.9 Device

Weight	Approx. 170 g
Flammable materials in accordance with EN 45545-2	None
Connection type	Mechanical coded two-tier terminals in push-in version, pluggable
Cable cross-section	0.2 … 1.5 mm^2 (AWG 24 … 16)
Cable	Flexible (stranded) with ferrule or solid (single-wire)
Use shielded copper wires only. The cables must be temperature-resistance to no lower than 75 °C (167 °F) unless the application demands more stringent requirements. The cables must be rated for the limit value of the protective device of the electrical circuit.	

10.10 Further Data

EMC immunity in accordance with EN 50121-3-2 and EN 50121-1	The device is designed for direct connection to an odometry control unit.
	All connections, including supply voltages V_S and U_B, are classified as belonging to the groups of signal and communication lines as well as the process, measuring and control lines in accordance with EN 50121-3-2.
	For direct connection to a battery, burst immunity is restricted to evaluation criterion B in accordance with EN 50121-3-2 and additional EMC protective measures must be planned.
Degree of protection in accordance with EN 60529	IP20[1)]
Mechanical stress vibration and shock in accordance with EN 61373, IEC 61373	Category 1, class B Tested by an independent accredited test laboratory
MTBF in accordance with SN 29500	$> 1.3 \times 10^6$ h (752 FIT)
Useful life in accordance with EN 50155	20 years, L4
Useful life in accordance with EN 13849	20 years

1) Not evaluated by UL.

11 Appendix

11.1 Standards and Directives

The devices have been developed in compliance with the following standards and directives:

Directives	
Directive 2014/30/EU (EMC)	
Directive 2014/35/EU (low voltage)	
Directive 2011/65/EU (RoHS)	
Directive 2012/19/EU (WEEE)	
Regulation (EC) No. 1907/2006 (REACH)	
Standards	
Railway applications	EN 50155, EN 50153
Resistance to shock and vibration	EN 61373, IEC 61373
Fire protection	EN 45545-1, EN 45545-2, EN 45545-5
EMC	EN 50121-1, EN 50121-3-2
Isolation requirements	EN 50124-1
Climate	EN 50125-1
Industrial applications	EN 61010-1
EMC	EN IEC 61326-1
Isolation requirements	EN 61010-1, EN IEC 60664-1
Restrictions on hazardous substances/RoHS	EN IEC 63000
Electrical safety and fire protection (Canada)	CAN/CSA-C22.2 No. 61010-1-12
Electrical safety and fire protection (USA)	UL 61010-1, UL File: E340287

The current standards and directives may differ from those specified here. The applied standards are documented in the Declaration of Conformity and the corresponding certificates. You can find these at → *www.knick-international.com* under the corresponding product.

11.2 Compliance with Standards

In this section, all relevant specifications are grouped by standard.

EN 50155

Installation location in accordance with EN 50155	Closed electrical operating area
	Installation location 1, Table C.1
	Weather-protected
Operating temperature class in accordance with EN 50155	OT4
Temperature change class for fast temperature changes in accordance with EN 50155	H1
Increased operating temperature class upon switching on in accordance with EN 50155	ST1, ST2
Power supply	V_S: 10 ... 33.6 V
	U_B: 10 ... 33.6 V
Switching class in accordance with EN 50155	C1 for 24 V nominal voltage
Interruption class of power supply unit in accordance with EN 50155	S1 for 24 V nominal voltage
Useful life in accordance with EN 50155	20 years, L4
Protective coating in accordance with EN 50155	Class PC2

EN 45545-2

Flammable materials in accordance with EN 45545-2	None
Hazard level for indoor and outdoor applications	HL3 (combustible mass 0 g)
	Certified by independent test laboratory

EN 50153

Electrical safety	All connected current and voltage circuits must meet the SELV, PELV, or EN 50153 Section I requirements.

EN 50125-1

Altitude class in accordance with EN 50125-1	AX up to 2,000 m above MSL
	Reduced isolation data for altitudes > 2,000 ... 4,000 m above MSL[1)]
Relative humidity (operation, storage and transport):	
Annual mean value	≤ 75%
Continuous operation	15 ... 75%
Continuous on 30 days in the year	75 ... 95%
On the other days occasionally	95 ... 100%
Altitude class in accordance with EN 50125-1	AX up to 2,000 m above MSL
	Reduced isolation data for altitudes > 2,000 ... 4,000 m above MSL[1)]
Relative humidity (operation, storage and transport):	
Annual mean value	≤ 75%
Continuous operation	15 ... 75%
Continuous on 30 days in the year	75 ... 95%
On the other days occasionally	95 ... 100%

1) On request

EN 50124-1

Pollution degree in accordance with EN 50124-1	PD 2

EN 50121-3-2, EN 50121-1

EMC immunity in accordance with EN 50121-3-2 and EN 50121-1	The device is designed for direct connection to an odometry control unit.
	All connections, including supply voltages V_S and U_B, are classified as belonging to the groups of signal and communication lines as well as the process, measuring and control lines in accordance with EN 50121-3-2.
	For direct connection to a battery, burst immunity is restricted to evaluation criterion B in accordance with EN 50121-3-2 and additional EMC protective measures must be planned.

Industrial applications

EN 61373

Mechanical stress vibration and shock in accordance with EN 61373, IEC 61373	Category 1, class B Tested by an independent accredited test laboratory

EN 61010-1

Installation location in accordance with EN 61010	Enclosed control cabinet

11.3 Details on Isolation, Isolating Distances, Contamination, and Overvoltage

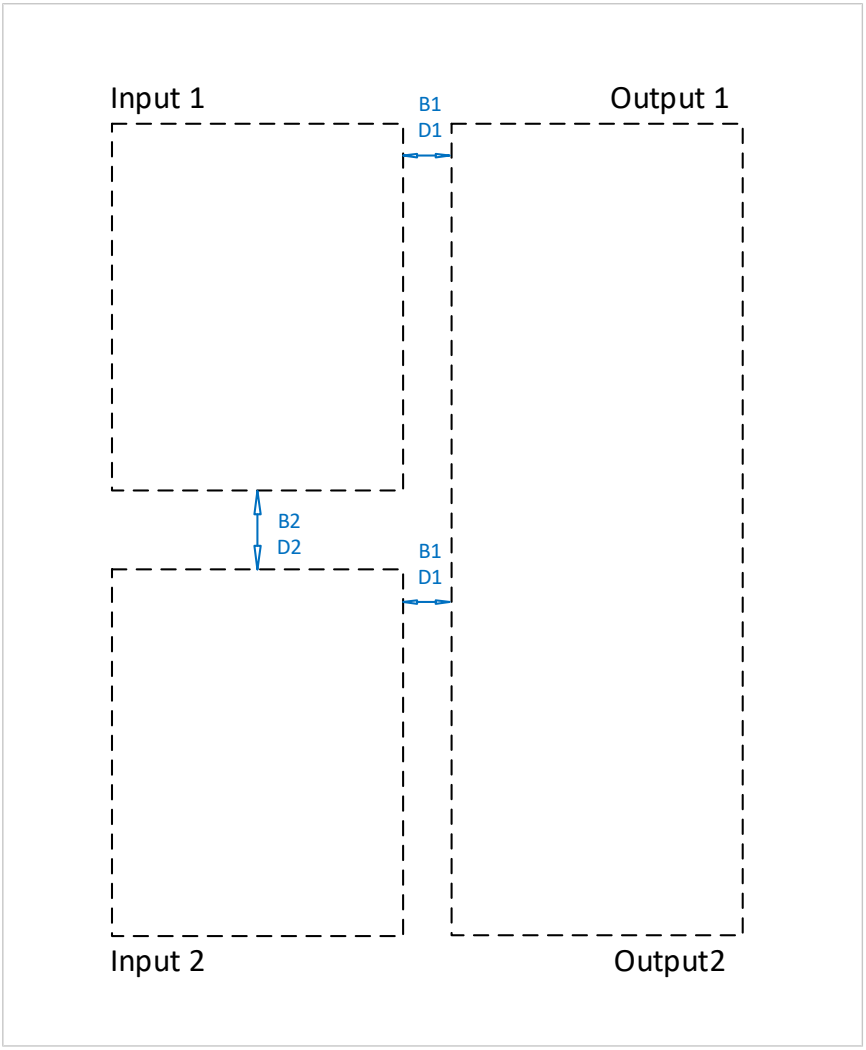

Rated Isolation Voltages (excerpt)

Section	Actual value [mm]		ISO	OV	PD	≤ Altitude [km]		Rated isolation voltage [V]
	Clear-ance	Creep-age dis-tance				2	4	EN 50124-1, EN 60664-1, EN 61010-1, UL 61010-1
B1	11	11	B	III	2	x	x	1000
D1	11	11	D	II	2	x		1000
D1	11	11	D	III	2	x		600
D1	11	11	D	II	2	x	x	600
D1	11	11	D	III	2	x	x	300
B2	3	3	B	III	2	x		300
D2	3	3	D	II	2	x		300
D2	3	3	D	II	2	x	x	150

Key:

D: Reinforced insulation

B: Basic insulation

OV: Overvoltage category

PD: Pollution degree

12 Safety Manual

12.1 General Description

Using a P16890 makes it possible to extract vehicle speed information that is transmitted as electrical square-wave signals from a sensor to a primary control unit and route it to a secondary control unit (signal doubling).

The assumption is that the sensor for the intended applications (on both the primary control unit and the secondary control unit) may be considered suitable (SRAC A); possibly under the condition that SRAC C is satisfied.

Due to the use of redundancy principles and the SIL-compliant design (of the input part), the quantitative analysis yields a negligible frequency of interference to the signal transfer from the sensor to the primary control unit (contribution of each individual input channel of the P16890 to the error rate of an interference incident is less than 7×10^{-13} per hour). In this context, the verification makes reference to the specifications in accordance with EN 50129, Table E.4 (captive properties).

The safety and safety integrity level requirements are derived from basic assumptions about the unit functions supported by a P16890. The corresponding safety and safety integrity level requirements are listed below.

Information on the assumptions made in this context (SRACs) with regard to the use of a P16890 follows.

12.2 Safety and Safety Integrity Level Requirements

12.2.1 Functional Safety Requirements

The functional safety requirement underlying the development was defined on the basis of a market study and is as follows:

1. The speed information received by the primary control unit must match the speed information transmitted by the sensor at all times, even after the integration of a P16890, and must not exhibit any significant delay as the result of the integration of a P16890.

12.2.2 Safety Integrity Requirements

The safety integrity requirements underlying the development were defined on the basis of a market study and are as follows:

1. The design elements of a P16890 that could cause interference to the flow of signals between the sensor and primary control unit must meet the requirements in accordance with EN 50129 SIL 4.
2. The two output signals of a P16890 to a primary control unit must fulfill the independence specifications in accordance with EN 50129, Section B.3.2, SIL 4.
3. In terms of immunity and emission, the P16890 must implement the specifications of EN 50129 (as described in Section 7.2, Structure of the Technical Safety Report "Section 4: Operation with External Influences"; in other words, integrating standards EN 50121, EN 50124, EN 50125 and EN 50155 – as applicable for vehicles).
4. The output signals to the primary control unit must present a tolerable delay of no more than 1 ms; in other words, significantly below the threshold caused by the inertia of rolling stock.

12.3 SRACs for System Project Planning and Structure, as well as Operation, Maintenance and Safety Monitoring

All of the safety-related application conditions (SRACs) listed below must be fulfilled to be able to justify using a P16890 for a safety-related application.

For practical reasons, no distinction is made between SRACs for system project planning and structure and SRACs for operation, maintenance and safety monitoring here.

12.3.1 SRAC A: Sensor Prerequisites

Name	P168*0-SRAC_A
Title	Sensor Prerequisites
Text	The integrator must ensure that the signals coming from the sensor are suitable and sufficiently qualified for the intended application context (with reference to application of the control unit). **Note:** Integrating a P16810/P16820/P16890[1)] does not relieve the integrator from ensuring that the sensor is suitable for the intended applications in the project from the viewpoint of functional safety and is sufficiently qualified. → *SRAC C: Implementing Sensor-Dependent SRACs, p. 61*

12.3.2 SRAC B: Detecting a Current Drop to 0 mA (Primary Control Unit)

Name	P168*0-SRAC_B
Title	Detecting a Current Drop to 0 mA (Primary Control Unit)
Text	The integrator must ensure that the primary control unit monitors the incoming current signals via a P16810/P16820/P16890[1)] and initiates a safe state upon detecting a current drop to 0 mA.

12.3.3 SRAC C: Implementing Sensor-Dependent SRACs

Name	P168*0-SRAC_C
Title	Implementing Sensor-Dependent SRACs
Text	The integrator must implement the SRACs defined by using the sensor. **Note:** Including SRACs, in terms of wiring between the sensor and primary control unit. **Note:** The suitability of a P16810/P16820/P16890[1)] for detecting sensor operating faults does not depend on the implementation of possible sensor SRACs.

12.3.4 SRAC D: Validity of the Input Signal of the Primary Control Unit

Name	P168*0-SRAC_D
Title	Validity of the Input Signal of the Primary Control Unit
Text	The integrator must ensure that the primary control unit considers incoming signals as valid. Here, the following conditions apply: - For incoming current signals (I_{in}): The primary control unit considers the signal valid as long as the voltage drop at the input of the universal speed signal doubler is less than 1 V. - For incoming voltage signals (U_{in}): The primary control unit considers the signal valid as long as the input impedance of the universal speed signal doubler is greater than 60 kΩ. - For the incoming voltage reference (U_S): The primary control unit considers the signal valid as long as the input impedance of the universal speed signal doubler is greater than 60 kΩ.

1) The SRACs specified in this chapter apply to multiple products. The product to which this user manual refers is decisive.

12.3.5 SRAC E: Wiring (input side)

Name	P168*0-SRAC_E
Title	Wiring (input side)
Text	For the P16810/P16820/P16890 wiring[1)], the integrator must implement adequate quality assurance measures. Here, the integrator must particularly ensure that the following conditions are met when connecting a P16810/P16820/P16890[1)]: - The information transmitted to the primary control unit is not corrupted and (in the case of a P16820[1)] and P16890[1)]) there is no negative impact on the required independence of the sensor signals, if any. - The signals received by a P16810/P16820/P16890[1)] may be considered as sufficiently qualified even after wiring. → *SRAC A: Sensor Prerequisites, p. 61* **Note:** If the integrator does not/cannot implement sufficient measures in terms of connection to the information flow from the sensor to the primary control unit, the integrator must ensure that an alignment with sufficiently qualified and independent speed information is carried out on the primary control unit. **Note:** The connecting cables from where the sensor signal is tapped to the P16810/P16820/P16890[1)] must be connected and routed with care in accordance with the state of the art such that short circuits between the cables (for voltage input) or interruptions in the cables (for current input) are avoided.

12.3.6 SRAC F: Does not apply to P16810/P16820/P16890

12.3.7 SRAC G: Does not apply to P16810/P16820/P16890

12.3.8 SRAC H: Does not apply to P16810/P16820/P16890

12.3.9 SRAC I: Does not apply to P16810/P16820/P16890

12.3.10 SRAC J: Protection Against Environmental Influences and Unauthorized Access

Name	P168*0-SRAC_J
Title	Protection Against Environmental Influences and Unauthorized Access
Text	The integrator must ensure that each P16810/P16820/P16890[1)] universal speed signal doubler is integrated into a weather-proof control cabinet inside or outside the vehicle. The control cabinet must be adequately secured against unauthorized access and protected against harsh conditions in accordance with EN 50129, and must not violate the vehicle profile or the structural integrity of the vehicle.

12.3.11 SRAC K: Implementation of the requirements applicable to the use of a P16810/P16820/P16890 as described in the user manuals

Name	P168*0-SRAC_K
Title	Implementation of the requirements applicable to the use of a P16810/P16820/P16890[1)] as described in the user manuals
Text	The integrator must implement all the requirements for using a P16810/P16820/P16890[1)] contained in the user manuals.

1) The SRACs specified in this chapter apply to multiple products. The product to which this user manual refers is decisive.

12.3.12 SRAC L: DIP switch configuration compliant with the wiring (here: only input side)

Name	P168*0-SRAC_L
Title	DIP switch configuration compliant with the wiring (here: only input side)
Text	The integrator must ensure that the set DIP switch configuration agrees with the implemented (input-side) wiring.

12.3.13 SRAC M: Safety Testing

Name	P168*0-SRAC_M
Title	Safety Testing
Text	The integrator must coordinate with the railway operator to determine if safety testing (as defined in EN 50129) is considered necessary and implement it accordingly. The results must be integrated into the higher-level safety case. If necessary, Knick will support the integrator as part of the safety testing of a universal speed signal doubler.

12.3.14 SRAC N: Secondary control units – only non-safety-related applications

Name	P168*0-SRAC_N
Title	Secondary control units – only non-safety-related applications
Text	The use of a P16810/P16820/P16890[1)] is only justified then if the speed-dependent application of the secondary control unit has only been rated as non-safety-related (in the sense of EN 50126-1, 3.7).

1) The SRACs specified in this chapter apply to multiple products. The product to which this user manual refers is decisive.

13 Abbreviations

AWG	American Wire Gauge
CE	Conformité Européenne (European conformity)
DIP	Dual Inline Package (slide switch with positions ON and OFF)
DOT	Direction of travel
EMC	Electromagnetic compatibility
f_{in}	Frequency of the input signal
FIT	Failures In Time (failures in 10^9 hours)
f_{out}	Frequency of the output signal
GND	Ground
GND_{in}	Reference potential for input signals
GND_{out}	Reference potential for output signals
HL	Fire protection class in accordance with EN 45545-2
HTL	High threshold logic (logic level with high switching thresholds)
I_B	Current into terminal V_B
I_{in}	Current input
I_{GND}	Current from terminal GND
I_{out}	Output current
IP	International Protection/Ingress Protection
I_s	Current into terminal V_S
MTBF	Mean Time Between Failures
MSL	Mean Sea Level
NC	Normally Closed
Out	Output
OV	Overvoltage Category
PC	Protective coating class in accordance with EN 50155
PD	Pollution Degree
PELV	Protective Extra Low Voltage
P_{max}	Power consumption total device (V_S and U_B)
REACH	Registration, Evaluation, Authorisation and Restriction of Chemicals (directive for restriction of use of specific hazardous substances in electric and electronic devices)
R_L	Resistance at output
RoHS	Restriction of Hazardous Substances
SELV	Safety Extra Low Voltage
SIL	Safety Integrity Level
ST	Switch-on extended operating temperature (increased operating temperature at switch-on)
SW	Switch (switch output)
T_{amb}	Permitted ambient temperature
t_{OL}	Time of overlap
t_p	Propagation time
U_B	Voltage supply (output driver)
U_{in}	Voltage input
UL	Underwriters Laboratories (recognized testing body and certification organization)
U_{out}	Output voltage
U_S	Voltage reference for level detection
V_{cc}	Output voltage of external power supplies
V_S	Output circuit, supply of output channels

WEEE	Waste from electrical and electronic equipment

Knick GmbH
Beuckestraße 22
14163 Berlin
Germany

Phone: +49 30 80191-0
info@knick.de
www.knick-international.com

Translation of the original instructions
Copyright 2026 • Subject to change
Version 5 • This document was published on October 15, 2026.
The latest documents are available for download on our
website under the corresponding product description.

TA-300.450-KNEN05

106615